SUSS MJB 3

MASK ALIGNER

Serial No._____

Service Manual

1. GENERAL DESCRIPTION AND PRINCIPLES OF OPERATION
2. UTILITIES AND MACHINE DIMENSIONS
3. MACHINE SPECIFICATIONS
4. BASIC ADJUSTMENT PROCEDURES
5. PREVENTIVE MAINTENANCE
6. REPLACEMENT PARTS IDENTIFICATION MANUAL
7. ELECTRICAL AND PENUMATIC DRAWINGS

This Service Manual is subject to review and/or revision.

P/N 080AA810
0391

KSM® Karl Suss

Chapter 1

GENERAL DESCRIPTION AND PRINCIPLES OF OPERATION

1 GENERAL DESCRIPTION AND PRINCIPLES OF OPERATIONS

The SUSS MJB 3 Mask Aligner is designed for high resolution photolithography in a laboratory, development or pilot production environment. The product line offers unsurpassed flexibility in the handling of irregularly shaped substrates and pieces of differing thicknesses, as well as standard size wafers up to 3" in diameter.

With the modular construction, the equipment lends itself to ease of service; functional groups are easily accessible and assemblies can be quickly modified or exchanged.

Various configurations are characterized by different light sources and alignment modes.

1.1 A BRIEF ORIENTATION

The operation of the MJB 3 is straightforward and easy to learn. First, load a mask into the machine. Then place the substrate on the chuck and insert the chuck into the alignment stage.

At this point bring the substrate into contact with the mask by turning the contact lever counterclockwise. The CONTACT light on the front panel illuminates. This operation also accomplishes wedge error (parallelity) compensation (WEC) using a unique 3-point leveling approach.

By pulling the separation level towards the front of the machine, the operator obtains sufficient separation for alignment, and the CONTACT light will go out as the SEPARATION light illuminates. The substrate can now be aligned to the mask using the X, Y, and Theta micrometers. The operator can easily scan the microscope over the substrate in either the X or Y direction, or both simultaneously, by using the precision microscope manipulator.

When satisfactory alignment has been achieved, move the substrate back into contact with the mask by pushing the separation lever all the way to its rearmost position until the SEPARATION light goes out and the CONTACT light re-illuminates. The substrate is now ready for exposure.

To initiate exposure, set the exposure time on the timer and press the EXPOSURE button. In most models, the microscope will then elevate a sufficient distance to allow the objective to clear the maskholder (the lifting is not necessary in all cases). The mirrorhouse now moves forward over the mask. When the mirrorhouse reaches its foremost position, the shutter opens and exposure takes place for the specified amount of time. After exposure is complete, the shutter closes, the mirrorhouse retracts, and the microscope moves back down to its original position.

The substrate may now be unloaded. Rotate the contact lever fully towards the front of the machine, releasing the substrate from the mask. Pull the transport slide to the right and carefully remove the substrate from the chuck.

1.2 EXPOSURE PROGRAMS

The MJB 3 offers three exposure programs which can be selected with the HP (High Precision), ST (standard), and SOFT CONT. (soft contact) buttons. These buttons determine the sequence of events after the EXPOSURE button is pushed.

Vacuum Contact (HP) Mode - In the HP program, a vacuum is drawn between the mask and wafer prior to exposure. This mode allows the highest resolution since the gap between mask and wafer as a result of non-flatness, dust particles, etc. is minimized. Chucks equipped with vacuum gaskets must be used in this mode in order to obtain a vacuum between the substrate and the mask.

Standard (ST) Hard Contact Mode - During exposure, the vacuum holding the substrate to the chuck is switched off and positive nitrogen pressure is used to press the substrate against the mask.

Soft Contact Mode - When the ST and SOFT CONT. buttons are illuminated simultaneously, the soft contact mode is selected and the substrate is held to the mask just by the mechanical pressure of the chuck throughout the exposure. The vacuum holding the substrate to the chuck remains on.

Proximity (Optional) - If the machine is equipped with a button marked PROXIMITY, and the ST mode is selected, exposures may be made with a small gap between the mask and substrate. This proximity gap is determined by the position of the separation lever.

1.3 THE SUBASSEMBLIES OF THE MJB 3

The MJB 3 is made up of the following discrete subassemblies:

1.3.1 Alignment Stage

The alignment stage is the heart of the MJB 3, and consists of the pneumatics and mechanics for mask/substrate parallelity compensation and mask and substrate vacuum, maskholder (and maskholder clamping mechanism), Z-axis movement, alignment separation mechanism, X, Y, and Theta alignment micrometers, and variable thickness adjustment.

1.3.2 Machine Base

The base contains the relays, pneumatics, valves, and throttles which control the various machine functions.

1.3.3 Front Control Panel

The front control panel contains the indicators and operating controls, including the CONTACT and SEPARATION indicator light, HP/ST exposure mode selection button (except MJB 3 Standard), SOFT CONTACT exposure mode button, VACUUM MASK button, optional PROXIMITY button, VACUUM CHAMBER button (except MJB 3 Standard) and the exposure timer. A vacuum gauge and throttle for adjusting the vacuum chamber vacuum are located at the left end of the front panel except on the MJB 3 Standard which has no vacuum chamber.

1.3.4 Manometer Box

The manometer box contains the gauges, regulators and throttles for adjustment of compressed air and nitrogen to the machine.

1.3.5 Microscope

The microscope assembly consists of the microscope adapter, microscope manipulator, and the microscope itself. Many microscope options are available, including normalfield, splitfield, and objective revolvers, as well as brightfield, darkfield, and interference contrast illumination.

The microscope manipulator is equipped with pneumatic brakes which are unlocked by pressing the buttons on the manipulator handle. Press just one button to select an X-only or Y-only scan. If both buttons are pressed simultaneously, the microscope can be scanned in any direction.

1.3.6 Lamphouse and Mirrorhouse

There are two types of lamphouse assemblies supplied with MJB 3 aligners. The MJB 3 Standard and MJB 3 HP/200W are equipped with a lamphouse containing a 200W mercury vapor exposure lamp, a spherical collecting mirror and a condenser lens assembly. Adjustment knobs for each of the components are located on the back of the lamphouse. After passing through the condenser lens assembly, the exposure light is reflected off a 45° surface mirror at the front of the mirrorhouse onto the mask and substrate.

The MJB 3HP/350W which uses the UV400, UV300, UV250, or UV200 exposure optics is equipped with a lamphouse containing an exposure lamp, an ellipsoidal collecting mirror, and a 45° cold light mirror. The type of exposure lamp (350W or 500W) depends on the optical range which is selected. The cold light mirror reflects the desired short-wavelength ultraviolet light through a fly's eye lens and transmits the longer wavelengths to a heat sink located in the bottom of the lamphouse. Adjustment knobs to move the lamp in X, Y, and Z are located on the front face of the lamphouse. The mirrorhouse and lamphouse contain a condenser lens, a diffraction reducing lens plate, a 45° surface mirror and a collimation lens. An extra frame is provided in the lamphouse tube for a filter (when required). The SUSS diffraction reducing exposure system provides very high resolution over the entire exposure area, resulting in steep resist edges and minimal diffraction effects.

1.4 SPECIAL FEATURES

Several special features are incorporated into the MJB 3 to enhance flexibility and ease of operation.

1.4.1 VACUUM CHAMBER Button

All MJB 3 models are equipped with a VACUUM CHAMBER button, except for the MJB 3 Standard (which has no vacuum chamber). With this feature, it is possible to check the alignment prior to exposure with the mask and substrate in vacuum contact. This is particularly useful when using high magnification objectives with restricted depth of focus.

1.4.2 Vacuum Chamber Adjustment

The vacuum chamber is adjustable in all MJB 3 models except the MJB 3 Standard. Under certain circumstances, the operator may wish to expose substrates in vacuum contact mode with less than full vacuum in the vacuum chamber. For this purpose a vacuum gauge and adjustment throttle are provided on the left side of the front control panel. This adjustment does not affect the amount of vacuum under the substrate during alignment. Instructions for setting the vacuum level can be found in Section 2.5.1 of the Operator's Reference Manual.

The vacuum gauge can also be used to detect vacuum leaks in the vacuum chamber caused by damaged chucks, vacuum gaskets, etc.

1.4.3 Airing

When using a chuck equipped with a vacuum gasket, a partial vacuum may be unintentionally pulled between the substrate and mask during alignment due to an imperfect seal between the substrate and the chuck; this causes the substrate and mask to stick together and make alignment difficult or impossible. The situation can occur if the back side of the substrate is unusually rough or scratched, or if scratches are present in the chuck surface.

To overcome the problem, a small flow of nitrogen can be introduced into the vacuum chamber whenever the substrate is separated from the mask. Instructions for adjusting the nitrogen flow can be found in Section 2.5.2 of the Operator's Reference Manual.

1.4.4 Variable Thickness Adjustment

The MJB 3 is equipped with a device to maintain constant contact pressure when processing substrates of various thicknesses. Alternatively, this device may be used to vary the contact pressure for a given wafer thickness. When the equipment is installed, a reference mask and wafer are used to set the contact pressure between the mask and wafer. This setting may be varied using the thickness adjustment knob located on the front of the stage near the bottom of the machine. For a detailed description of how to set the contact pressure, refer to Section 2.5.3 of the Operator's Reference Manual.

1.4.5 Nitrogen Loss Detector (not available on all machines)

In the MJB 3HP/350W, the exposure lamp is cooled by nitrogen. In the event of a nitrogen loss, the monitoring system causes the NITROGEN LOSS button to flash, and an audible alarm to sound. After approximately 3 minutes, the machine will automatically turn off the exposure lamp if the nitrogen supply has not been restored.

1.4.6 Infrared Viewing System for Backside Alignment (optional)

The MJB 3 may be equipped with a video camera, monitor, and special tooling to enable backside alignment and printing. For this application, special chucks are provided. An IR wand with a halogen light source is located below a filter plate to which the substrate is held by vacuum. The video camera is mounted on the alignment microscope using a trinocular microscope head. The image tube employed in the camera depends on the transmission characteristics of the substrate material.

For materials transparent to wavelengths below 1100nm (such as GaAs), a high quality camera having good response both in the short IR and the visible regions is used. For materials which are only transparent at longer IR wavelengths (such as InSb), a lead sulfide infrared tube is available. This tube has good response at the longer wavelengths but somewhat less resolution and more "lag" (persistence of previous image and delay in displaying a new image on the monitor). For the sake of economy, a true infrared tube is used only where absolutely necessary.

An aligner equipped with the infrared viewing system may also be used for conventional alignment by changing the chuck and other small mechanical components. This takes only a few minutes.

A more detailed description about the operation of the infrared viewing system can be found in the Appendix (Chapter 8) of the Operator's Reference Manual.

Chapter 2

UTILITIES AND MACHINE DIMENSIONS

2 UTILITIES AND MACHINE DIMENSIONS

2.1 ENVIRONMENTAL REQUIREMENTS

The machine should be located in a vibration-free area that is also as free as possible from dust and acid fumes. The area must be maintained at a room temperature between 20°C (68°F) and 22°C (72°F) and at a relative humidity of 45 - 55%. Since the equipment may be affected by static electricity from the operator, it should be installed where the floor covering does not generate a static charge.

The equipment must be installed at least 8 cm (3 in) from the wall to allow for ventilation. In addition, all utilities are connected to the back of the unit. Although the machine can usually be serviced in place, it may be necessary in some cases to move it 60 cm (24 in) from the wall for access.

2.2 POWER REQUIREMENTS

2.2.1 U.S. Market

The units require two grounded (3-pronged) 110V/60Hz outlets:

- one at 20 amps for the machine electronics
- one at 20 amps to power the isolation transformer which is connected to the lamp power supply.

2.2.2 International Market

The units require 220V/50Hz or 110V/60Hz AC.

- Power cord - grounded 3-wire cable; 1.5m (5 ft) for 220V.

2.3 OTHER UTILITY REQUIREMENTS

Requirements for nitrogen, vacuum, and compressed air:

- Nitrogen: 30 - 45 psi or 2 - 3 bar; consumption - 17.5 scfh (0.5 m^3/h)
- Vacuum: more than 24" of Hg or less than 200 mbar absolute (less than -0.8 bar gauge); flow rate = insignificant
- Compressed air: 75 - 105 psi or 5 - 7 bar; consumption - 35 scfh (1.0 m^3/h)

Exhaust lamphouse cooling:

- Hose: 100 mm inside diameter
- No exhaust required for 200W and 350W lamp

It is important to use dry nitrogen and to eliminate any water, oil, or dust particles in the compressed air lines. All connections to a house vacuum system should be separate to avoid vacuum interference.

International Market - The shipment includes hoses to connect vacuum, compressed air, and nitrogen to the machine. The customer is responsible for the connections to the back of the machine. KARL SUSS will equip each machine with the appropriate connector for 6 mm (1/4") hose.

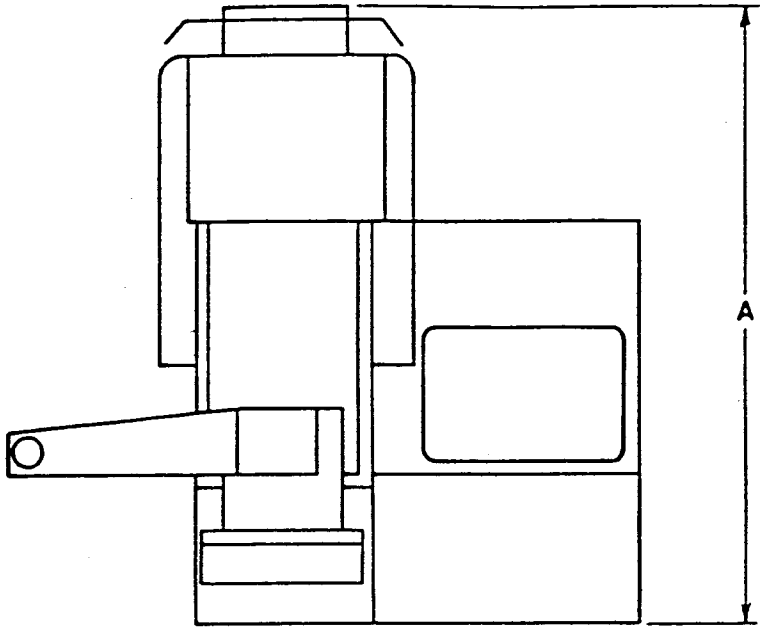

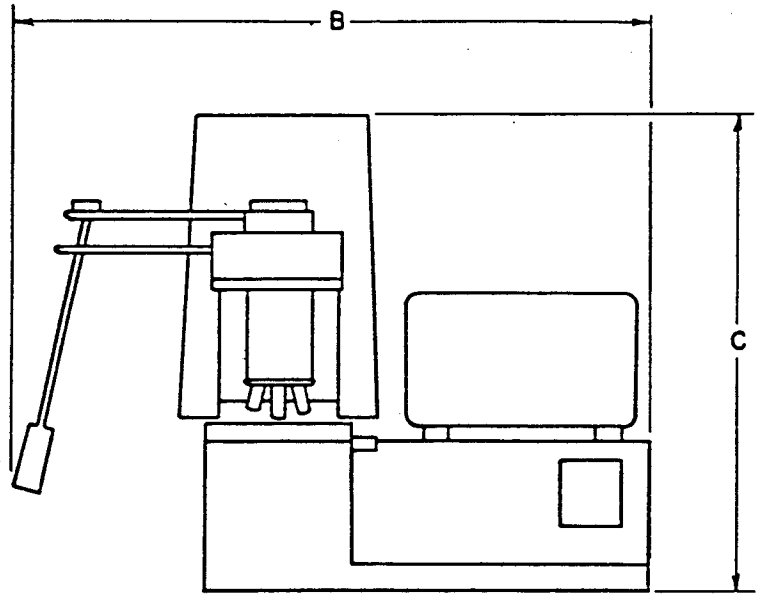

DIMENSIONS

	DEPTH A	WIDTH B	HEIGHT C
MJB 3 Standard	700 mm (27.6")	625 mm (25")	550 mm (21.7")
MJB 3 HP/200W	700 mm (27.6")	625 mm (25")	550 mm (21.7")
MJB 3 HP/350W	760 mm (30")	625 mm (25")	550 mm (21.7")

SUSS MJB 3 Footprint

Chapter 3

MACHINE SPECIFICATIONS

MACHINE SPECIFICATIONS

MACHINE DATA

Machine Type: _____ IR Scanning: Yes ☐ No ☐

Serial Number: _____ Date: _____

PO/AK Number: _____

Checked By: _____

EQUIPMENT DESCRIPTION

Maskholder: _____ PN: _____

_____ _____

_____ _____

_____ _____

Chucks: _____ SN: _____

_____ _____

_____ _____

_____ _____

Microscope Type: _____ SN: _____

Microscope Lift: YES ☐ NO ☐ PN: _____

Objectives: _____ _____ _____ _____ Eyepieces _____ _____ _____

Optics: UV400 DUV 300 DUV 250 Sensor Type: _____

Power Supply Type: _____ SN: _____

Power Meter Type: _____ SN: _____

Power Meter Probes: N/A 253.7 320 365 405

Modifications/Revisions _____

_____

_____

_____

Chapter 4

BASIC ADJUSTMENT PROCEDURES

BASIC ADJUSTMENT PROCEDURES
TABLE OF CONTENTS

Section		Page
4.0	INTRODUCTION	4 - 1
4.1	PNEUMATICS	4 - 1
	4.1.1 Function and Operation	
	4.1.2 Pneumatic Valve	
	4.1.3 Pneumatic Valve List	
	4.1.4 Pneumatic Throttle List	
4.2	STAGE AND WEDGE ERROR COMPENSATION (WEC) SYSTEM	4 - 3
	Figure 4-1 Wafer Leveling	
	4.2.1 Function and Operation	
	4.2.2 Stage PM	
	4.2.3 Chuck Leveling	
	Figure 4-2 Chuck Leveling	
	4.2.4 Setting Contact Pressure	
	Figure 4-3 Stage Contact Pressure	
4.3	MIRRORHOUSE	4 - 8
	4.3.1 Function and Operation	
	Figure 4-4 Mirrorhouse Slide and Components	
	4.3.2 Mirrorhouse Slide PM	
4.4	MICROSCOPE MANIPULATOR	4-10
	4.4.1 Function and Operation	
	Figure 4-5 Microscope Leveling Apparatus	
	4.4.2 Manipulator PM	
	4.4.3 Brake PM	
	4.4.4 Microscope Leveling	
	4.4.5 Microscope Lift	
4.5	EXPOSURE SHUTTER	4-14
	4.5.1 350W Shutter Operation	
	4.5.2 350W Shutter Maintenance	
	4.5.3 200W Shutter Operation	
4.6	CARE OF OPTICAL COMPONENTS	4-15
	4.6.1 Lamphouse Optics - 350W	
	4.6.2 Lamphouse Optics - 200W	
	4.6.3 Tubus - 350W	
	4.6.4 Mirrorhouse	
	4.6.5 Cleaning Optical Components	
	Figure 4-6 Exposure Optical System	
4.7	LAMP MOVEMENTS	4-18
	4.7.1 350W Lamphouse (S/N 2286 and Above)	
	4.7.2 350W Lamphouse (S/N 2285 and Below)	
	4.7.3 200W Lamphouse	
	Figure 4-7 200W Lamphouse Rear Access Panel	
4.8	MACHINE OPERATION SEQUENCE	4-22
	4.8.1 Sensor List	

4.0 INTRODUCTION

The SUSS MJB 3 Mask Aligner is designed for high resolution photolithography in a laboratory or pilot production environment.

Because of the rugged and practical design, the machine is a laboratory workhorse. The MJB 3 requires regularly scheduled maintenance to keep it in proper operating condition.

Chapter 4 discusses preventive maintenance procedures.

> **CAUTION:** THESE PROCEDURES SHOULD BE PERFORMED ONLY BY KARL SUSS SERVICE PERSONNEL WHO HAVE BEEN TRAINED IN THE OPERATION AND SERVICE OF THE MJB 3, OR CUSTOMERS WHO HAVE ATTENDED THE KARL SUSS MJB 3 MAINTENANCE TRAINING SEMINAR.

If questions or problems arise, please call Karl Suss Service at (802) 244-7884. Have your machine model and serial number available when you call.

4.1 PNEUMATICS

4.1.1 Function and Operation

The mechanical movements of the MJB 3 are accomplished primarily with pneumatics. A system of valves and throttles control the facilities to the maskholder clamping, the exposure chuck, the movement of the microscope up and down, the movement of the mirrorhouse, the braking systems in both the wedge head and in the microscope manipulator, and the cooling to the lamphouse components.

The valves are mounted on the pneumatic block which is located under the mirror housing on the left hand side of the machine. To access this area, two bolts have to be taken out of the mirrorhouse base plate. Then the mirrorhouse can be lifted and set to rest on the built-in stand. When lifting the mirrorhouse, be careful not to touch any optical components to avoid getting finger prints on them.

Each of the pneumatic valves is tied to a 24V bus. The valves are activated by applying a ground to the signal side. The valves can be used in either one of two ways: normally on, or normally off. An example of a normally on valve is valve #5 which applies the brake for the microscope manipulator in the X-direction. The brakes for the manipulator are normally on and working. They are released by pressing the button on the manipulator arm, which removes the ground from the signal side. This turns the valve off and removes air pressure from the brake.

When a valve is normally on, no voltage will be observed across the terminals when measured with a voltmeter. When the valve is turned off, 24V should be seen across the terminals. Therefore, when a particular machine function is initiated, a change in the voltage across the valve terminals should be observed.

To troubleshoot a pneumatic problem, first determine whether the necessary machine cycle steps have taken place. For help with this, refer to Section 4.8, Machine Operation Sequence. If the machine cycle steps are correct, move to the subassembly in question and check the pneumatic utility. For example, with the X-direction manipulator brake, remove hose #5 and see whether the compressed air is on or off. If it is off when it should be on or vice versa, move on to the pneumatic block to continue troubleshooting.

Using the same example, check the terminals across valve #5 with a voltmeter. If a change in potential is observed when the brake release button is pressed, it indicates that the valve is getting the signal to activate. If the valve does not change state, or in other words, the air does not turn off to the brakes, it means that the valve is not working properly and should be replaced.

4.1.2 Pneumatic Valve Replacement

To replace a valve, follow these steps:

- Carefully unsolder the two wires to the terminals.
- Remove the diode from the terminals.
- Now remove the large nut and washer from the top of the valve which allows you to lift off the solenoid part of the valve.
- Next, remove the two screws which bolt the base to the manifold, and lift off the cylinder portion of the valve.
- Begin installation of the new valve by clipping off the signal side terminal so that it does not interfere with the 24V bus.
- Next, carefully seat the two new O-rings under the cylinder base and place the base on the manifold.
- Reinstall the valve base, using the same two screws.
- Now replace the solenoid portion, install the large washer and nut, and carefully resolder the two wires to the correct terminals.

4.1.3 Pneumatic Valve List

Valve #	Function
V1	Vacuum under wafer in ST mode
V2	Vacuum under wafer in HP mode
V3	WEC head brake clamping
V4	Provides N2 for vac. chamber pressure adj.
V5	Microscope manipulator brakes, X movement
V6	Microscope manipulator brakes, Y movement
V7	Mirrorhouse rear position
V8	Mirrorhouse forward position
V9	Microscope lift
V10	Nitrogen under the wafer in Hard Contact
V11	Vacuum chamber
V12	Airing function
V13	Mask vacuum
V14	Shutter opening and closing
V18	Wafer transport vacuum

4.1.4 Throttle List

Throttle #	Location	Function
7	Machine left side toward rear	Mirrorhouse forward movement Adjust for smooth movement
8	Machine left side toward rear	Mirrorhouse reverse movement Adjust for smooth movement
9	Machine left side toward rear	Microscope up movement Adjust for smooth movement
10	Microscope lift left side	Microscope down movement Adjust for slow smooth movement
12	Machine left side toward rear	Airing; Adjust as necessary
14	Machine base under lamphouse	Shutter close. Adjust for smooth movement; assure shutter closes fully
15	Bottom side of lamphouse	Shutter open. Adjust for smooth movement; assure shutter opens fully
16	Machine base back panel	Heat sink cooling. Open 5 turns for maximum flow
17	Manometer box back panel	Lamp base cooling. Ushio 350W - 2.5 L/Min Osram 350W - 3.5 L/Min
18	Machine left side toward rear	Hard contact pressure Adjust according to process
19	Manometer box	Shutter cooling (DUV only)

4.2 STAGE AND WEDGE ERROR COMPENSATION (WEC) SYSTEM (REFER TO FIG. 4-1)

4.2.1 Function and Operation

In the stage, the wafer and chuck rest on the chuck leveling plate which is a part of the wedge error compensation (WEC) system. The chuck leveling plate rests on three brake pins, which in turn are sitting on a silicon tube filled with 30 psi of compressed air. This is known as the air bladder. The WEC system rests on top of the Z axis.

The Z axis and WEC system are moved up and down, in and out of contact by the contact lever. Located behind the contact lever are two microswitches (E1 and E2) which turn vacuum on under the wafer, and control the pneumatic braking system in the WEC head.

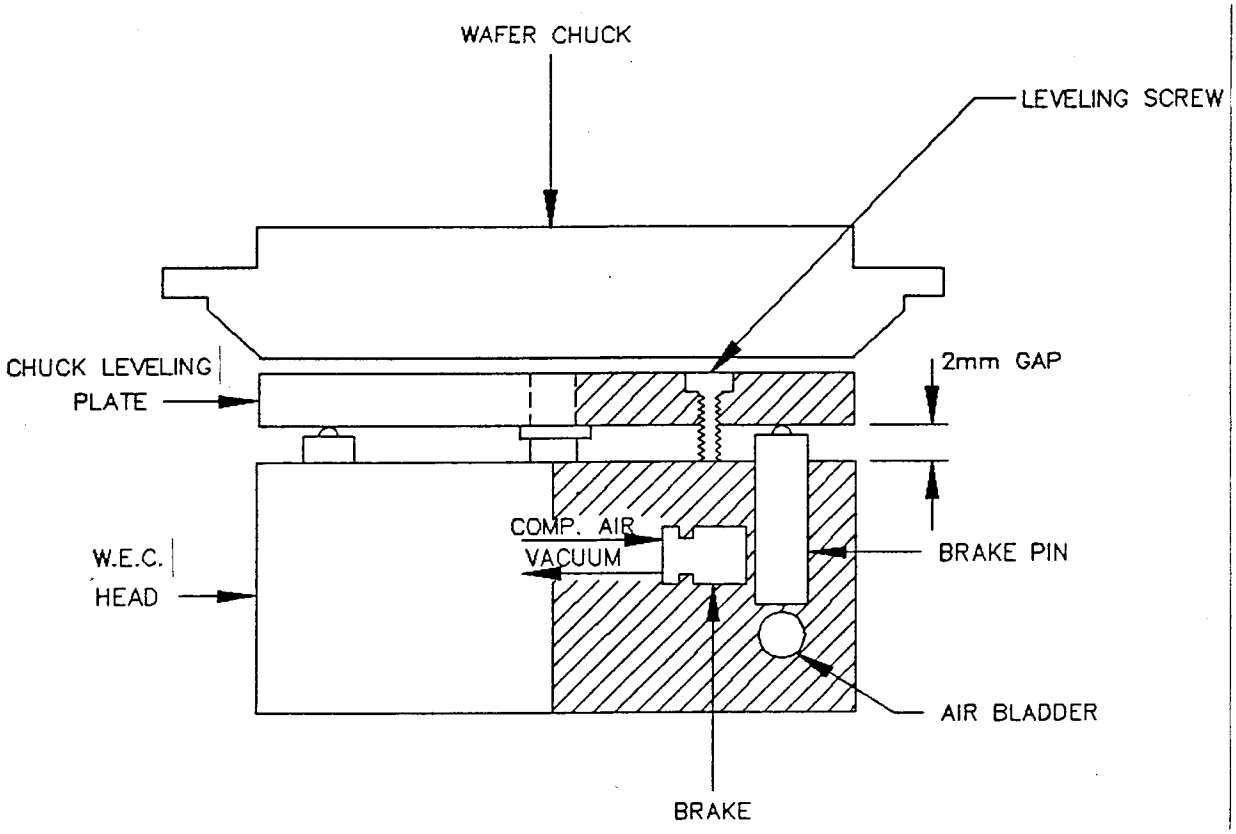

Figure 4 - 1 Wafer Leveling

As the contact lever is turned and the wafer is moved up, microswitch E1 is activated, turning on vacuum under the wafer to hold the wafer on to the chuck. Continuing up, the wafer begins to make contact with the mask while the air bladder is being compressed. As the air bladder is compressed, the wafer is leveled to the mask. The higher the Z axis travels, the greater the pressure between the mask and the wafer.

When the contact lever is in the full contact position, the wedge head brakes are turned on by the activation of microswitch E2 (compressed air is turned on to push the brakes against the brake pins). This locks the wafer in a position parallel to the mask, so that when the separation lever is pulled the wafer will separate from the mask and remain parallel. Microswitch E3 is located at the beginning of the travel of the separation lever. The contact on E3 is broken when the separation lever is pulled, lighting the separation light on the front panel. If the separation lever is not in the contact position, the machine will not allow you to do an exposure.

When coming out of contact, microswitch E2 is turned off, turning off the compressed air on the brakes. At the same time vacuum is turned on to retract the brakes from the brake pins. Continuing down, microswitch E1 is turned off, turning off the vacuum under the wafer. The stage then moves to the out-of-contact position so that the wafer can be removed.

4.2.2 Stage PM

- Remove the chuck, wafer transport, transport mounting ring, and the chuck leveling plate. Be very careful when removing the three leveling screws - they are very fragile and held firm with a small amount of Loctite 222.

- One pair at a time, remove a brake pin and then the matching brake by putting the contact lever into the full contact position with machine power on. The air pressure will push the brake pin out the side of the wedge head.

- Clean the brake pin and brake; with a cotton swab, also clean the holes that these fit into.

- Clean the O-ring; then put a very light coat of lube (SUSS 365) on the O-ring and insert the brake into the hole. Clean the braking surface with a cotton swab before replacing the brake pin so that there is no grease on the braking surfaces.

- Repeat these steps for each brake and brake pin pair.

- Next, put a small dab of lube (SUSS 365) on all exposed ball surfaces and begin to put the chuck leveling plate back on. Be careful not to twist the vacuum hose that attaches to the bottom of the leveling plate. Start the leveling screws in their holes but do not screw them in.

- Using three 2mm hardened pins, set a 2mm gap between the chuck mounting plate and the air bladder block. Tighten the three leveling screws on to the three hardened pins. This will rough-level the plate.

NOTE: At this point, it is possible to lubricate the rotation plate if necessary. Put a small amount of lube (SUSS 779) into the screw holes for the transport mounting ring, force it in by threading a screw into the hole. Be careful not to thread the screw too far since it can bottom out and cause damage to the plate surfaces.

After applying the lubricant, re-mount the transport mounting ring and the wafer transport. Work the lubricant in by rotating the wafer transport.

4.2.3 Chuck Leveling (Refer to Fig. 4-2)

After cleaning the wedge head brakes, the chuck leveling plate should be leveled to the maskholder. To do this you will need the dial indicator kit which is supplied with the machine. The kit consists of the dial indicator, a steel ground bar and a support apparatus for measuring the contact pressure. You will need the indicator, the bar and an empty maskholder. The larger the opening in the maskholder, the easier it is to level the chuck.

- Place the empty maskholder into the machine. Set the dial indicator in the steel bar and then place it in the empty maskholder so that the stem of the dial indicator goes through the maskholder and contacts the chuck leveling plate. Leave the chuck in the out-of-contact position for leveling.

- Set the indicator to zero near one of the leveling screws, then move the indicator from one screw to the other, noting the deflection on the dial. This deflection indicates the levelness of the plate.

- Adjust by making small changes to the setting of the corresponding leveling screw until it is level to within 10 microns. Generally it is easier to level by bringing a point down; therefore, find the lowest point and level the others down to the same value.

- When moving the indicator from point to point, try not to let the dial tip by hitting the edge of the stage frame which would cause unnecessary adjustments. You should not have to make gross adjustments to the leveling screws since setting the leveling plate to a 2 mm gap during the stage PM should have rough leveled the plate to within 30 microns or so.

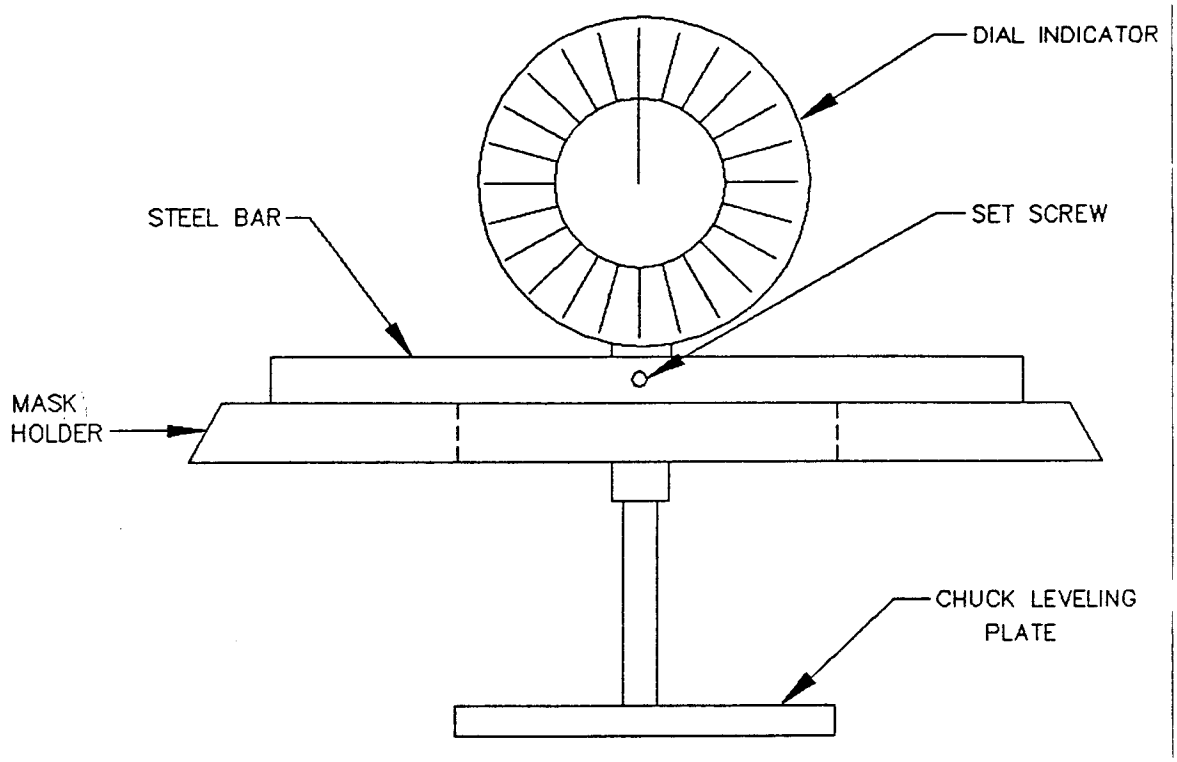

Figure 4 - 2 Chuck Leveling

4.2.4 Setting Contact Pressure (Refer to Fig. 4-3)

The amount of pressure between the wafer and the mask in contact can be varied by using the contact height adjustment knob. Depending on the process, you may want a very high or a very low pressure. This pressure can be measured with the dial indicator kit supplied with the machine.

To set or measure the contact pressure, you need (1) a chuck, (2) a wafer and mask of the same thickness as those to be processed, and (3) the steel ground bar. These parts (which must be clean) should be placed on the chuck leveling plate in the order listed.

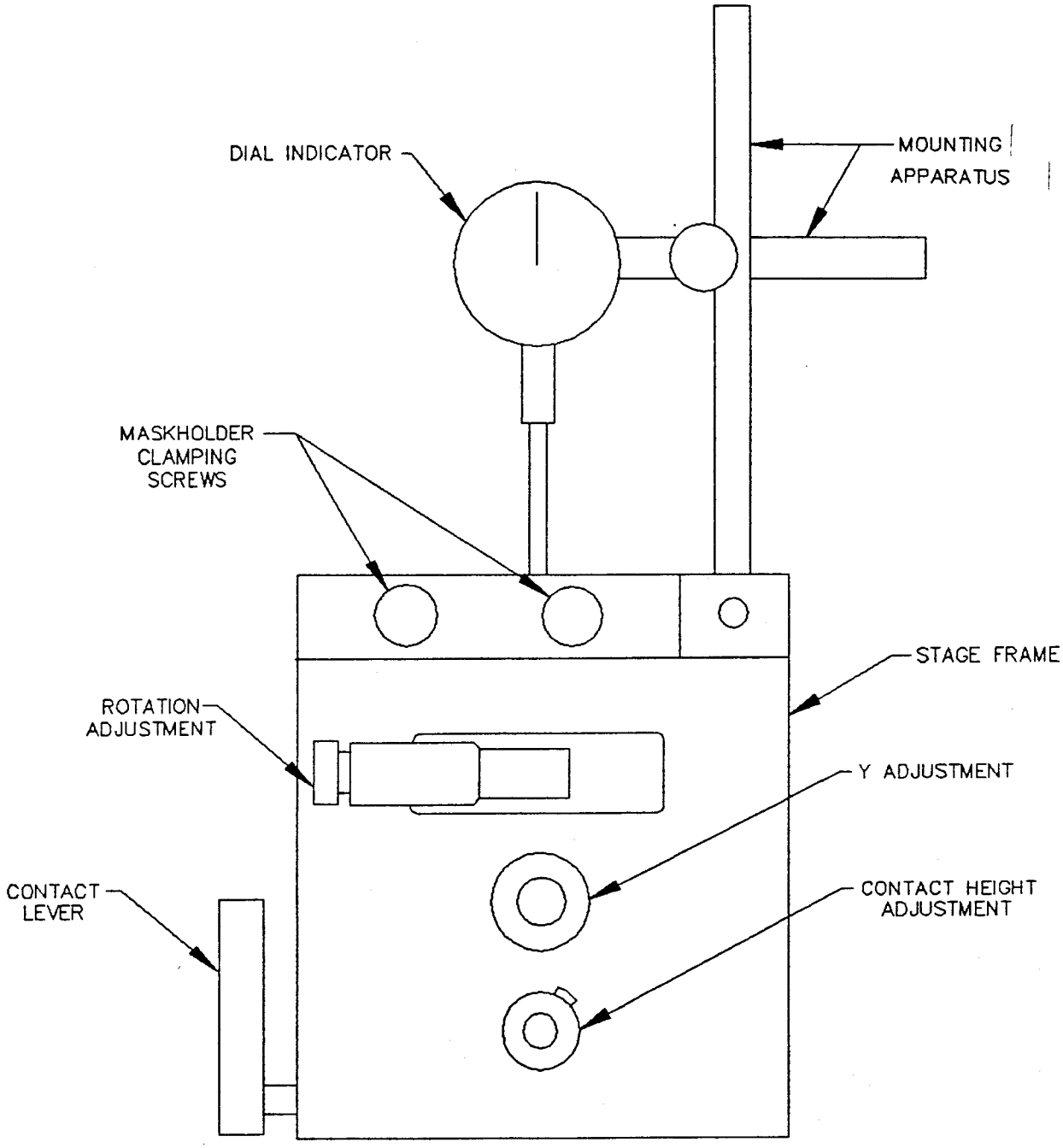

Figure 4 - 3 Stage Contact Pressure

- Set up the dial indicator and mounting apparatus so that the tip of the indicator is resting on the steel leveling bar as close to the middle of the wafer as possible as shown in Figure 4-3.

- With the contact lever in the out-of-contact position, set the dial to zero.

- Move the contact lever to the contact position and read the contact pressure setting.

- To change the contact pressure, use the contact height adjustment knob located on the front of the stage under the Y axis adjustment micrometer. To increase the setting, turn the adjustment knob counterclockwise. To decrease the value, turn the knob clockwise.

In general, we suggest a contact pressure of 600 microns with a silicon wafer. This corresponds to a reading of 60 on the dial indicator since each small increment on the dial is 10 microns. With a GaAs wafer, we suggest 300 microns. These figures are simply intended as a rough starting point. Depending on a particular process, more or less contact pressure will be used.

4.3 MIRRORHOUSE (REFER TO FIGURE 4-4)

4.3.1 Function and Operation

The mirrorhouse contains the front turning mirror and the front lens. The front turning mirror directs the light down to the exposure plane. This mirror is coated on one side; it is important that the coated side face the exposure plane.

The front lens collimates the light one final time. The lens and mirror should be free of fingerprints or other dirt. If necessary, clean these optics as described in Section 4.6.5.
A front lens is not used in the 200W system.

The mirrorhouse is mounted on a dove tail slide called the "damper slide". This slide permits the housing to move over the exposure plane for exposure.

The mirrorhouse is moved forward and back on the damper slide by air pressure in the mirrorhouse cylinder. In the normal resting position of the mirrorhouse, valve #8 is turned on holding the mirrorhouse in the back position. When the exposure button is pushed, the microscope lift raises the microscope so that the microscope objectives do not contact the maskholder. Microswitch E4, mounted in the right hand side of of the microscope lift, verifies that the microscope has cleared the mask stage. If this switch is not made, the mirrorhouse will not travel forward.

After the microscope has been lifted out of the way, valve #8 turns off and valve #7 turns on to push the mirrorhouse forward. V7 and V8 each have a throttle that regulates the exhaust of air from the cylinder, thus controlling the speed of forward and reverse movement. The throttles, T7 and T8, are located on the left hand side to the rear of the machine. T7 controls the forward movement, while T8 controls the movement back.

The mirrorhouse moves forward until microswitch E6, located on the lower right hand side of the mirrorhouse base (Fig. 4-4) is made by a cam mounted on the side of the mirrorhouse. E6 advises the system that the mirrorhouse is in the exposure position, and that it is time to open the lamphouse shutter. Once the exposure is complete and the shutter closes, valve #7 turns off and valve #8 turns on to pull the mirrorhouse back to the normal position. E3 at the rear of the mirrorhouse base (Fig. 4-4) is made when the mirrorhouse reaches the back position, signaling the end of the exposure cycle.

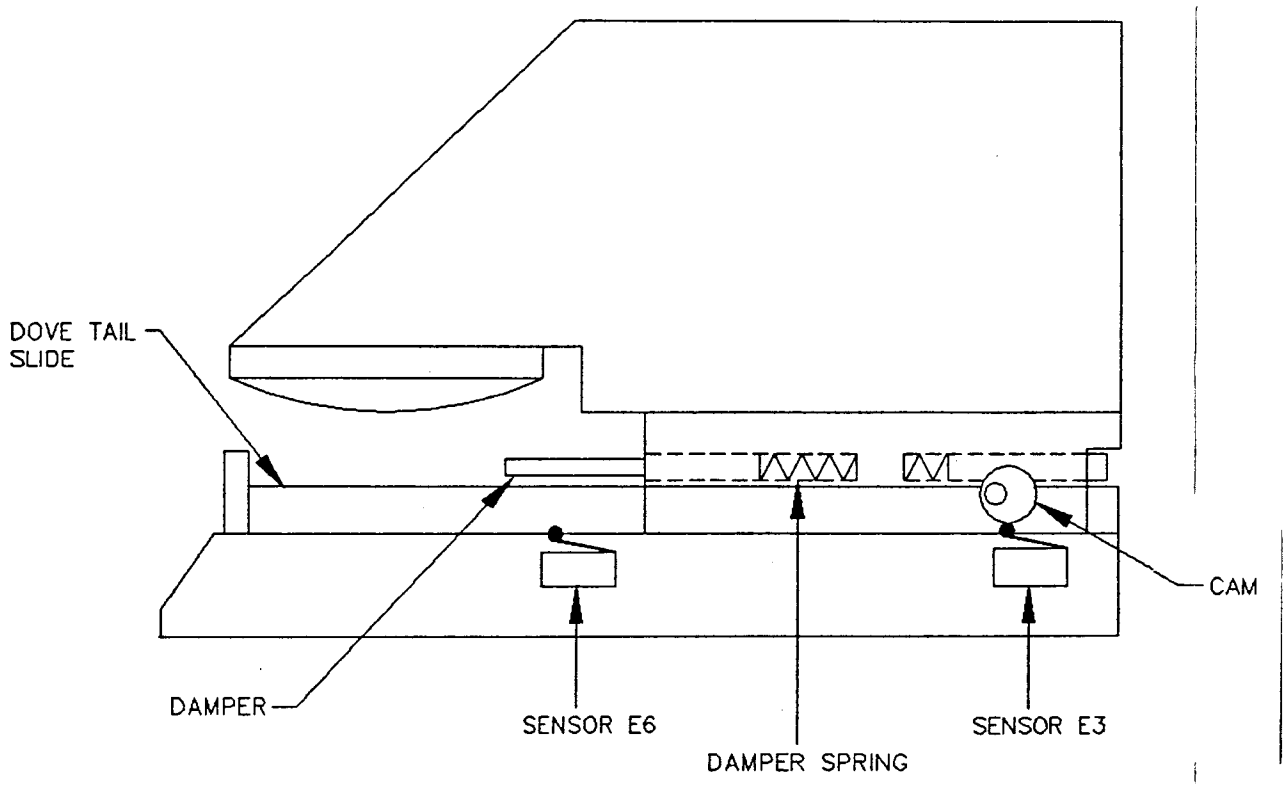

Figure 4 - 4 Mirrorhouse Slide and Components

4.3.2 Mirrorhouse Slide PM

- Remove the microscope, microscope lift, microscope manipulator, front lens, and counterweights (if there are any).
- Tilt the mirrorhouse back, and remove the two nuts on the end of the mirrorhouse cylinder, and the stop block.
- Remove the mirrorhouse by sliding it off toward the front of the machine. Be careful not to touch the front turning mirror when removing the mirrorhouse.
- Clean all sliding surfaces thoroughly and check the condition of the damper springs. Replace them if necessary.
- Grease all sliding surfaces with SUSS Lube 365 (P/N 625MS002), and slide the mirrorhouse back on. Make sure that the plunger of the mirrorhouse cylinder is centered in the opening on the mirrorhouse. If it is not centered, adjust by loosening the cylinder mounting screws and moving.
- Put on the stop block, then the two nuts on the end of the cylinder plunger. Tighten the two nuts against each other. Be sure that there is a little bit of play between the nuts and the mirror housing so as not to bind the plunger.

There are two types of adjustment on the mirrorhouse movement, a bearing adjustment and pneumatic adjustment.

The bearings, located under the mirrorhouse, ride on the damper slide and absorb part of the microscope weight. They are adjusted by means of two small set screws on each bearing. The adjustment of these bearings is very critical, therefore they should only be modified if necessary. Adjust so that the mirrorhouse moves smoothly.

The pneumatic adjustments are throttles controlling the exhaust on valves #7 and #8. These are located to the rear of the machine on the left hand side and are labeled 7 and 8 respectively. Closing throttle# 7 reduces the amount of air exhausted, thus increasing the speed in the forward travel. Throttle #8 works in the same way. These throttles should be adjusted only when necessary, so that the mirrorhouse moves smoothly in both directions.

4.4 MICROSCOPE MANIPULATOR (REFER TO FIG. 4-5)

4.4.1 Function and Operation

The MJB 3 has one manipulator with two bearing slides: one each for the X and Y microscope movements. These slides ensure smooth and even movement of the microscope. The motion of the slides is stopped by two brakes operated with compressed air which are located in the rear and the right hand side of the manipulator. These brakes consist of two disks which apply pressure to a brake holder mounted on the manipulator.

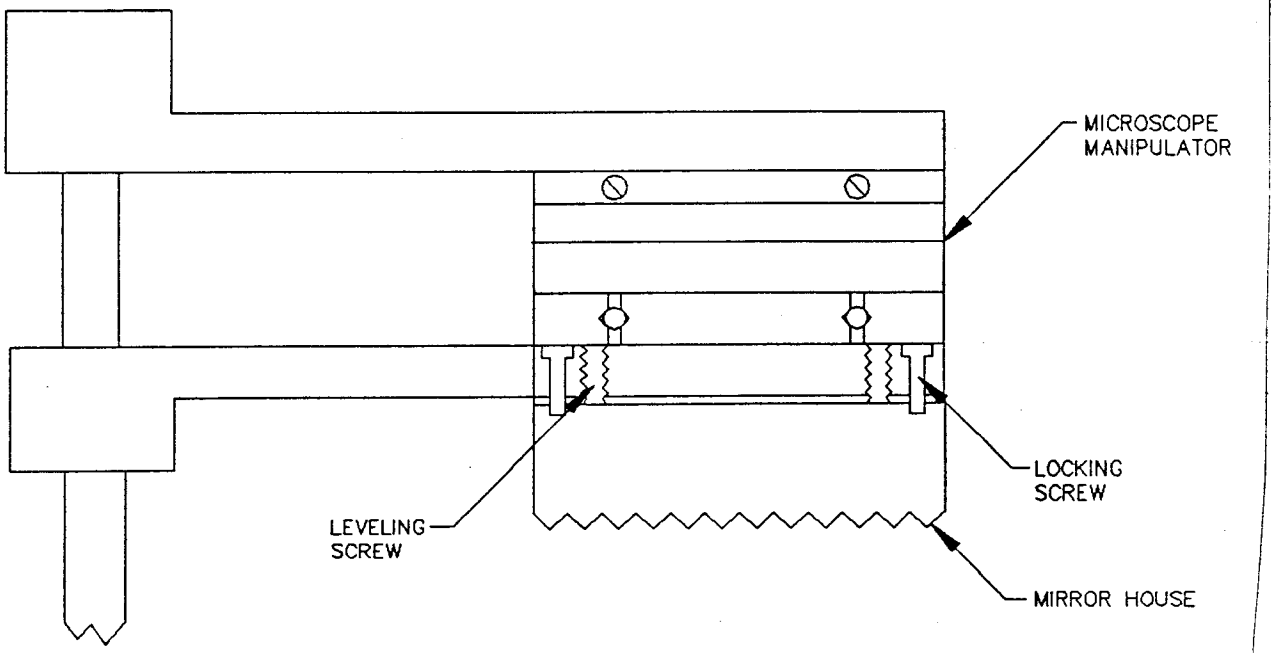

Figure 4 - 5 Microscope Leveling Apparatus

4.4.2 Manipulator PM
(Dwg. No. 25000748 - Parts Identification Manual)

CAUTION: DO NOT ATTEMPT THE FOLLOWING PROCEDURE WITHOUT PRIOR TRAINING FROM A QUALIFIED KARL SUSS REPRESENTATIVE. PERMANENT DAMAGE TO THE ASSEMBLY AND ITS ASSOCIATED PARTS MAY RESULT FROM IMPROPER ADJUSTMENTS.

- Turn off the machine power and air pressure. Remove in order the microscope, the microscope lift assembly, the manipulator arm, and the top mounting arm. Remove the brake assembly and set aside.

- Next remove the top (X direction) slide. Note the direction of mounting so that you can remount it properly. You will find shim washers under each screw. Put them in a safe place because you will use them.

- The bottom (Y direction) slide can also be removed at this point. Again, remember the mounting direction - keep track of the shim washers.

- Place one of the slides upside down and loosen the two tension screws on the side.

- Remove the three cap screws that hold the right ball slide from the top plate. Now remove the slide, ball bearings, the ball cage and the middle bearing plate. (Note: Do not remove the second, fixed, ball slide from the top plate.)

  Also remove the middle bearing plate end covers and the two end limit screws on the top plate.

- Clean and degrease all parts, and inspect the slides, ball bearings and the ball bearing stops for damage. Replace if necessary.

- To reassemble the slide, stand the top plate on its side with the mounted ball slide facing up. Grease the ball cage and place it onto the open slide. Place a ball bearing into each hole in the ball cage. Carefully place the middle bearing plate on the ball bearings, with the painted surface down, or so that the stop screws are aligned.

- Take the other ball cage, load it with grease and carefully place it on to the middle bearing plate. Drop a ball bearing into each hole.

- Replace the right ball slide, leaving the three mounting cap screws loose. Put the tension screws in loosely also. Work the center bearing plate back and forth to distribute the grease.

- Begin to adjust the tension screws by gently turning the screws until they just begin to tighten up, and then back them off 1/4 turn to establish the starting point. Tighten the mounting cap screws, and then check the tension by working the middle bearing plate back and forth against the stop pins. At this point, it should take very little force to push the middle plate against the stop pins. When this is properly adjusted it takes equal and considerable force to move the middle bearing plate against the stop pins.

CAUTION: MAKE VERY SMALL ADJUSTMENTS TO THE TENSION SCREWS TO AVOID OVER-TIGHTENING WHICH WILL CAUSE PERMANENT DAMAGE TO THE BALL BEARING SLIDES.

- To apply more tension to the slides, loosen the mounting cap screws and then make a small adjustment to the tension screws. Do not over-tighten. Then tighten the mounting cap screws and check the movement of the middle bearing plate against the stop pins.

  NOTE: The tension must be such that the microscope movement is concise and not sloppy - however, it must also be equal on both ends. If the tension is not equal on both ends, the ball cages will tend to "walk" or drift over time and will shorten the overall travel of the manipulator.

- Continue to make small adjustments and check the tension until the correct tension and movement is achieved.
- Repeat these steps to perform preventative maintenance on the other manipulator, and then re-assemble and mount on the machine. Do not forget to replace the shim washers under the manipulators and the top arm support.

4.4.3 Brake PM

(Dwgs. No. 25000748 and 25000756 - Parts Identification Manual)

The brake assembly consists of two brake bolts that rest in the brake block.

- Remove the two brake bolts - each bolt has an O-ring around the perimeter. Notice that the two narrow faces go together when the brakes are removed.
- Clean the brake bolts and the holes they came out of. Then apply a small amount of Suss Lube 365 to the O-ring only, just enough to lubricate the O-ring. Insert the bolts back into the brake block, remember the narrow sides go together, and clean any excess grease off of the braking surfaces. Repeat for the other brake assembly.
- Remount the brake assembly on the manipulator, and adjust the stop block so that it is parallel to the brake block, and about equally spaced from both sides.

The manipulator assembly PM should be complete. Test the operation of the manipulator and brakes. If problems or questions arise, please call Karl Suss Customer Service at (802) 244-7884 for further assistance.

4.4.4 Microscope Leveling

In the MJB 3, the mask and maskholder serve as the reference for stage and microscope leveling. In Section 4.2.3 the chuck mounting plate in the stage was leveled to the mask. Now the microscope manipulator will be leveled to the mask.

The microscope manipulator uses a four point leveling system. A pair of screws is located on each of the four corners of the base plate of the manipulator. The screw on the outside of the plate will be a hex head screw, and the one on the inside will be a slotted set screw. The slotted set screw is the leveling screw, while the hex head screw locks the assembly in place. The screws on a particular corner are accessible only when the manipulator is moved to the opposite corner.

- The way to level the manipulator with an M400 microscope is to first set the objective turret to the smallest power objective.

- Next choose a corner of the travel and focus on a feature on the mask. Move diagonally to the opposite corner and slowly focus, noticing whether the microscope is moving up or down as it comes into focus.

- When you have determined whether that particular corner must go up or down, move the manipulator back out of the way and use the two screws to adjust.

  The inside screw actually carries the manipulator base up and down, while the outer screw clamps the base in place. Loosen the outer screw, then adjust the inner screw as necessary. Turning the inner screw clockwise lifts that particular corner, while turning it counterclockwise brings that point down. After making an adjustment, remember to tighten the outer screw before moving the manipulator out of the way.

- Work back and forth to get those two corners into focus at the same time, then move to one of the two remaining corners and repeat these steps. When all four corners are in focus on the lowest power objective, switch to the next higher objective and repeat the procedure until you have finished the adjustment for the highest power objective.

At this point you should be able to move the microscope to any point over the mask and have it remain in focus. However it is very difficult to achieve perfect focus with the 50X objective.

4.4.5 Microscope Lift

The microscope lift is used to move the microscope up and out of the way of the mask holder during the exposure cycle, and keep the microscope objectives from contacting the maskholder.

The microscope lift is operated pneumatically. At the beginning of the exposure (after the exposure button is depressed), valve V9 is energized. As the microscope is raised, a rod or cam is passed over microswitch, E4, to verify that the microscope has cleared the maskholder. The cam or rod must make and break the microswitch contact to carry out the exposure - in other words, the cam continues moving above the microswitch.

On earlier models, the microswitch, P/N 61005983, was mounted vertically on the right hand side of the microscope lift. The cam is mounted in front of the microswitch, and passes the microswitch as the focusing rack and microscope are lifted. The only adjustment on this is to ensure that the roller arm on the microswitch makes full contact as the cam passes.

On newer machines, the microswitch, P/N 61020176, is used and mounted in the microscope lift horizontally, using a single set screw. A rod in the cylinder housing passes over the front of the switch to signal the objectives have cleared the maskholder. The adjustment on the microswitch is done by setting the switch in to the housing just far enough for the rod to depress the ball in the end of the switch. The switch is then locked into place with the set screw that comes in from the top. Be careful when making this adjustment. If the switch is inserted too far, it may be damaged when the lift goes up. After making the adjustment, first operate the lift by hand to check for proper and safe operation.

4.5 EXPOSURE SHUTTER

The exposure shutter allows the UV light to pass to the exposure plane when the mirrorhouse is in the forward position. There are two types of shutter control in the MJB3, one for the 350W system and one for the 200W system.

4.5.1 350W Shutter Operation

The shutter in the 350W system operates on compressed air. When the mirrorhouse reaches the forward position, valve #14 turns on, opening the shutter.

The speed of shutter opening can be controlled through throttle #15. This throttle is located under the lamphouse toward the front right hand corner of the lamphouse. Turning the screw head clockwise closes the throttle and slows the speed; turning it counterclockwise opens the throttle, speeding up the shutter opening.

Throttle #14 controls the closing speed of the shutter. When valve #14 turns off after the exposure, the air to the shutter is exhausted through throttle #14 which is located under the lamphouse on the back panel of the machine. Opening throttle #14 by turning the screw head counterclockwise speeds up the closing of the shutter.

Closing throttle #14 by turning the screw head clockwise slows the closing speed.

The shutter opening and closing speed should be set so that the shutter opens and closes completely, but does not strike either end with excessive force.

4.5.2 350W Shutter Maintenance

The shutter assembly is generally maintenance free. However, it may be necessary to replace the air cylinder on occasion if the shutter can not be made to operate properly after trying the throttle adjustments.

- To replace the shutter cylinder, open the lamphouse and remove the lamp, and cold light mirror. Remove the hose connection from the bottom of the cylinder.

- Now remove the L-shaped cylinder cover (two screws). Take out the two screws holding the shutter block from inside the lamphouse, then remove the two screws holding in the cylinder. The heads of these screws can be reached from the front, right hand side of the lamphouse. Having removed the six screws (total), you should be able to lift the entire shutter assembly out of the lamphouse.

- Take the two halves of the assembly apart, and remove the shutter and rotation axis from the cylinder block. To remove the cylinder, loosen the set screw on the side of the small block (notice the length of shaft exposed so the new cylinder can be put in the same distance) and then unthread the block off the shaft. Remove the large brass nut holding the cylinder on the mount.

- Put on the new cylinder and brass nut. Place the small block on and leave the same amount of shaft showing since this will determine how far the shutter lifts, and how completely it closes. Tighten the set screw on the block.

- Mate the two halves and put back into the lamphouse. The most difficult part is to line up the holes from the front of the machine. When the shutter assembly is back in place, check for proper operation. Make certain that the opening to the mirrorhouse is completely covered when not exposing. Also be sure the opening is completely cleared during exposure.

4.5.3 200W Shutter Operation

The exposure shutter in the 200W lamphouse is operated by a DC motor. A rod which reachs from the rotating shaft on the DC motor to the shutter lifts the shutter to open and close. This shutter does not require regular maintenance, however if the rod that lifts the shutter is not straight, the rod will bind and the shutter will not work.

If the motor fails, it must be replaced. To gain access to either the rod or the motor, remove the microscope and the two screws bolting the mirrorhouse to the base. Tilt the mirrorhouse base back and secure on stand. The motor and rod are now accessible for replacement or repair.

4.6 CARE OF OPTICAL COMPONENTS

The optical components of the MJB 3 are located in three parts of the machine - the lamphouse, the tubus, and the mirrorhouse. The following sections describe and locate the optical components.

4.6.1 Lamphouse Optics - 350W

The 350W lamphouse contains the 350W mercury exposure lamp, the ellipsoid mirror, the cold light mirror, and the exposure shutter.

The mercury exposure lamp fits into a socket which is mounted on an X, Y, Z movement assembly. This assembly allows proper alignment of the lamp for optimum intensity and uniformity. To learn how to perform these adjustments, refer to Chapter 5, Operator's Reference Manual.

The ellipsoid mirror is a collecting mirror that collects the lamp radiation and directs it down at the cold light mirror. It is the same for all wavelength ranges.

The cold light mirror passes the excess light to a heat sink to be exhausted out the back of the lamphouse. The mirror reflects the useful UV light toward the exposure plane.

Different types of cold light mirrors are used for various wavelengths. The #7 mirror is used in both the UV300 and UV400 systems. The mirror is coated on one side; the coated side must be up, facing the exposure plane. There is a small arrow etched on the side of the mirror which points to the coated side.

4.6.2 Lamphouse Optics - 200W

The 200W lamphouse contains a 200W mercury exposure lamp, a spherical (or Wolf) mirror, and a condensor lens assembly. The 200W mercury lamp fits into a socket mounted vertically on a movable plate which can be moved in the Z axis and also in a horizontal, rotational plane. To learn how to make the lamp adjustments, refer to Chapter 5, Operator's Reference Manual.

The spherical (or Wolf) mirror mounted behind the exposure lamp reflects the exposure light forward to the consdensor lens. The condensor lens then collimates the light as it advances to the exposure plane. The light continues directly to the front turning mirror. There are no optical components contained in the tubus of the 200W system.

4.6.3 Tubus - 350W

The tubus extends from the lamphouse to the mirrorhouse. Contained in the tubus are the fly's eye, condenser lens, and the diffraction reducing lens plate. With the UV300 system, an interference filter is included in the tubus.

The optical components are mounted in frames that slide down into holders in the tubus. The holders are mounted on rails that allow the lenses to be positioned at various distances from the lamphouse. A scale is located on the left side of the tubus to use as a reference when setting the distances of the optics.

The fly's eye lens which is positioned just outside the lamphouse disperses the light coming off the cold light mirror, and then directs it to the condenser lens.

The condenser lens collimates the scattered light coming from the fly's eye lens. The position of the condenser lens in the tubus affects the intensity and uniformity. The recommended setting for the lens is between 40mm and 50mm on the scale.

The diffraction reducing lens plate reduces diffraction effects in the printed image. The recommended position for the lens plate is between 80mm and 90mm.

The interference filter used in the UV300 system can be positioned anywhere in the tubus. It is generally placed between the condenser lens and the diffraction reducing lens plate.

4.6.4 Mirrorhouse - 200W and 350W Models

The mirrorhouse moves forward for exposure bringing the turning mirror and the front lens to the exposure plane. The turning mirror changes the direction of the exposure beam from horizontal to vertical. It is very important that the coated side face the beam.

The final optical component is the front lens, which is not used in the 200W system. The front lens in the 350W and DUV systems provide the final collimation and uniformity of the exposure beam. The front lens is specific for each wavelength. Refer to Chapter 5, Operator's Reference Manual for more information on the front lens used for a particular wavelength.

4.6.5 Cleaning Optical Components (Refer to Fig. 4-6)

The machine optics include:

1. ellipsoid mirror,
2. cold light mirror,
3. fly's eye lens,
4. condensor lens,
5. configuration lens plate,
6. front turning mirror, and
7. front lens.

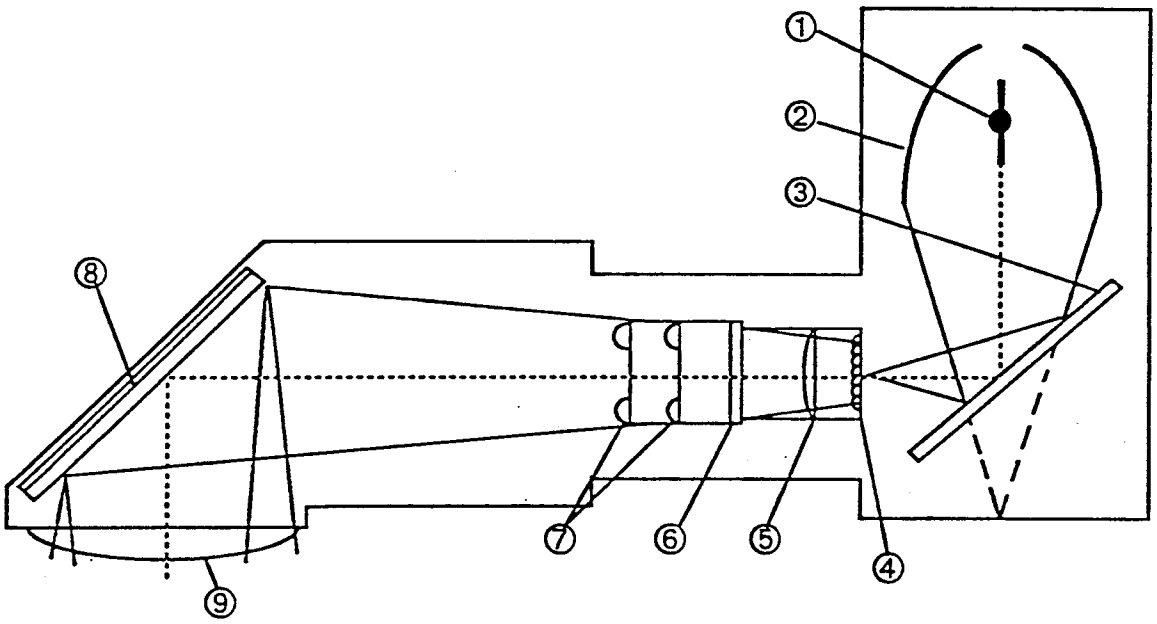

① Lamp
② Ellipsoidal Mirror
③ Coldlight Mirror
④ Fly's Eye Lens
⑤ Condenser Lens
⑥ Frame for Filters
⑦ Diffraction Reducing Lens Plates
⑧ Turning Mirror
⑨ Front Lens

Figure 4 - 6 Exposure Optical System (UV400/300/250/200)

In addition, there may be some sort of neutral density filter, depending on the configuration of the machine.

The optics should be clean at all times. Any dirt or fingerprints can permanently damage the coatings.

The components have to be removed from the machine and from their frames to be cleaned.

CAUTION: WEAR GLOVES WHEN HANDLING THE OPTICS.

The cleaning technique described can be used for all optical components except the neutral density filters. Do not attempt to clean the neutral density filters.

- Remove the optical components from their frames, and rinse them with distilled water.
- Apply a small amount of mild detergent (such as Joy or Ivory liquid) to the surface of the mirror . DO NOT USE ABRASIVE CLEANERS WHICH WILL SCRATCH THE COATING.
- Using a light circular motion, gently rub the surface of the lens. Be certain that you have a film of soap between your finger tips and the lens or you may scratch or finger print the lens.
- Rinse thoroughly with distilled water. Soap residue left on the lens will burn into the coating when the lamp is lit.
- Blow dry with clean nitrogen.

As mentioned, all of the optical components, with the exception of the neutral density filters, can be cleaned in this fashion.

4.7 LAMP MOVEMENTS

4.7.1 350W Lamphouse - (S/N 2286 and above)

With this lamphouse, the mercury exposure lamp fits into the X, Y, Z alignment assembly which allows the lamp to be focused in the ellipsoid or collecting mirror for maximum intensity and uniformity. For instructions on lamp replacement and adjustments, refer to Chapter 5, MJB 3 Operator's Reference Manual.

Each of the lamp movements operate about a particular pivot point. Three knobs located on the front of the lamphouse turn lead screws that push against a moving arm. The moving arm is held in place with spring tension. If these movements become sluggish, it may be necessary to inspect them more closely to determine whether maintenance is required.

To inspect the movements, remove the top cover from the lamphouse. Looking down, operate the three alignment knobs to see if they are working properly. If these are not working, you should remove the assembly for repair.

- Remove the exposure lamp, the ellipsoid mirror, and the cold light mirror to avoid damage. Remember to wear gloves when handling the optics.

- Remove the temperature resistant cooling tube from the fitting on the back of the alignment assembly, and the cathode cable. Also remove the three alignment knobs and lead screws by turning them counterclockwise until they are free of the housing. Note the orientation of these so that they can be reinstalled properly.

- The alignment assembly can now be removed by taking out the three 5mm flat head screws from the front of the lamphouse. Keep a hand on the assembly as you start to remove the screws so that the assembly does not fall out.

- Examine and operate the movements, watching for movement stress. The stress will center around the pivot points. If there seems to be a problem, isolate the pivot point, note the orientation, and then push the pivot pin out.

- Check the pin for corrosion or scoring. Polish the pin if necessary, but be very careful not to reduce the size which would leave the pin loose and not able to operate properly. Remove and work on only one pin at a time.

- Don't try to repair parts that are working correctly. Remember, "If it ain't broke, don't fix it!"

- When finished with the assembly, reassemble the lamphouse, install the movement assembly, the cooling tube, the cathode cable, the adjustment knobs, and the top cover. Reinstall the lamphouse optics.

CAUTION: WEAR GLOVES WHEN HANDLING THE OPTICAL COMPONENTS.

4.7.2 350W Lamphouse - (S/N 2285 and below)

The 350W lamphouse on machines with the serial number lower than 2285 have the exposure lamp mounted on an X, Y, Z movement assembly like the newer units. These movements are controlled by a red knob on top of the lamphouse which controls the Z movement of the lamp. A green knob and a blue knob on the front of the lamphouse control the X and the Y movement of the lamp respectively. These two knobs are used to maximize the lamp intensity, and to adjust the lamp uniformity. Refer to Chapter 5, Operator's Reference Manual for information on how to make these adjustments. If these adjustments are not working properly, it may be necessary to perform routine maintenance or repair these movements. To perform maintenance, follow these steps.

- Remove the lamp, and ellipsoid mirror from the lamphouse, and then remove the lamphouse from the machine.

- To remove the lamphouse, first remove the screws from the hinge on the side of the lamphouse. Then remove the shoulder screw from the kick stand, and lift the lamphouse off.

- Next, remove the top cover, and take off the cathode cable at the top of the lamp socket. You will now be looking down at the movement assembly.

- Take off the right hand side of the lamphouse. You will have to take off the hinge pieces to reach the bottom screws on the right side. At the top of the assembly, you will see the Z movement portion.

- Take the top plate off (remember the set screw on the side of the shaft) and lift the lamp socket and the Z axis movement straight up and out. The ball cage that rides on the shaft may be difficult to remove. If so, try to work the cage up slowly. However, replace it if necessary if it does not free up.

- With the Z movement removed, take apart the X and Y plates. The X and Y lead screws will have to be backed out first.

  NOTE: There are set screws on the shoulder screws used for rotation of the plates which must be loosened before backing out the shoulder screws.

- Clean the X and Y plates thoroughly, then reassemble. Set up so that the plates rotate smoothly, without excess play, when the set screw is tightened back down. The Z axis plate can also be put back together.

- Put the cathode cable back on, checking it for signs of wear. Over a period of time, this wire will become oxidized and brittle. Replace it if necessary as the deterioration can cause problems with the operation of the lamp.

- Put the right hand side, hinge parts, and the top of the lamphouse back on at this point. Then put the lamphouse back on the machine.

- Replace the ellipsoid and cold light mirrors. When putting the ellipsoid and cold light mirrors back in, be very careful not to get them dirty.

CAUTION: WEAR GLOVES WHEN HANDLING THE OPTICAL COMPONENTS.

- For instructions on how to install the mercury exposure lamp, refer to Section 5.2.1, Operator's Reference Manual.

4.7.3 200W Lamphouse (Refer to Fig. 4-7)

The 200W lamphouse contains a 200W mercury lamp. The lamp socket mounts onto a plate that is adjustable in the Z axis, and rotationally in a horizontal plane. In addition, a spherical (or Wolf) mirror is mounted on the rear access door and is adjustable in a vertical plane. These components are adjusted to optimize exposure intensity and uniformity.

Chapter 5 of the Operator's Reference Manual describes the procedure for adjusting the lamp movements. If the movements do not respond correctly, it may be necessary to perform maintenance on the movement assemblies.

- Open the rear access door and remove the 200W exposure lamp. Remember to wear gloves when handling the lamp. Then take off the door, first removing two screws which mount it on the pivot point, and then disconnecting the lamp connecting cables. Note the orientation of the cables so they can be reinstalled properly. DON'T TOUCH THE SURFACE OF THE COLLECTING MIRROR.

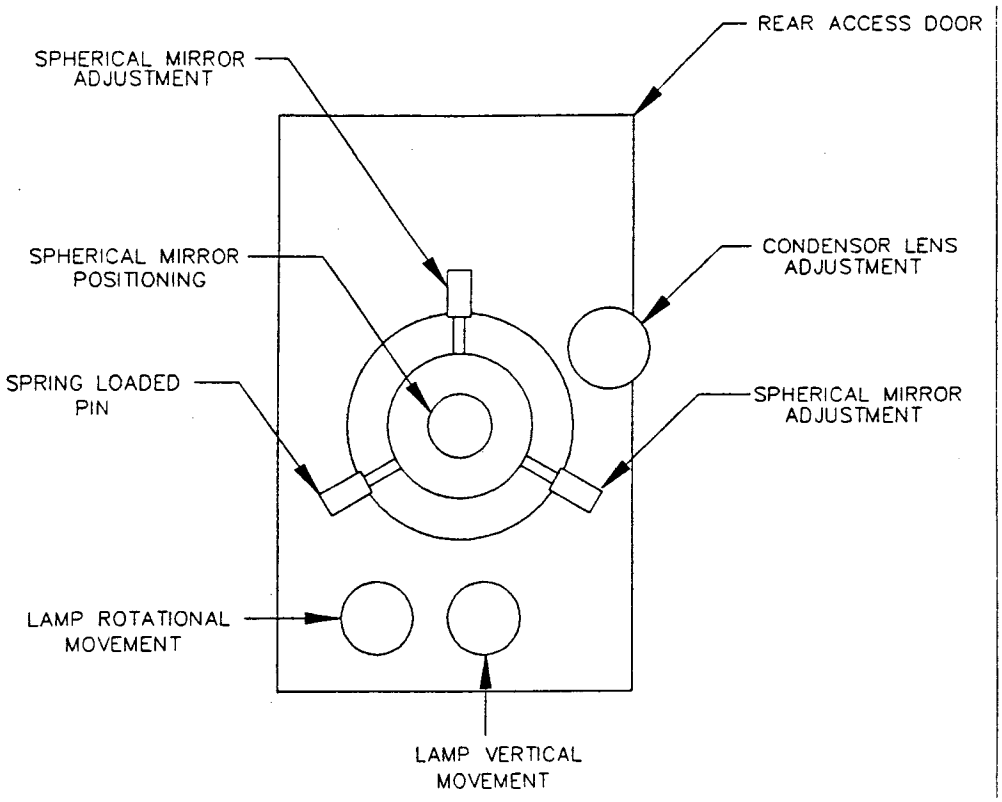

(a) Rear View

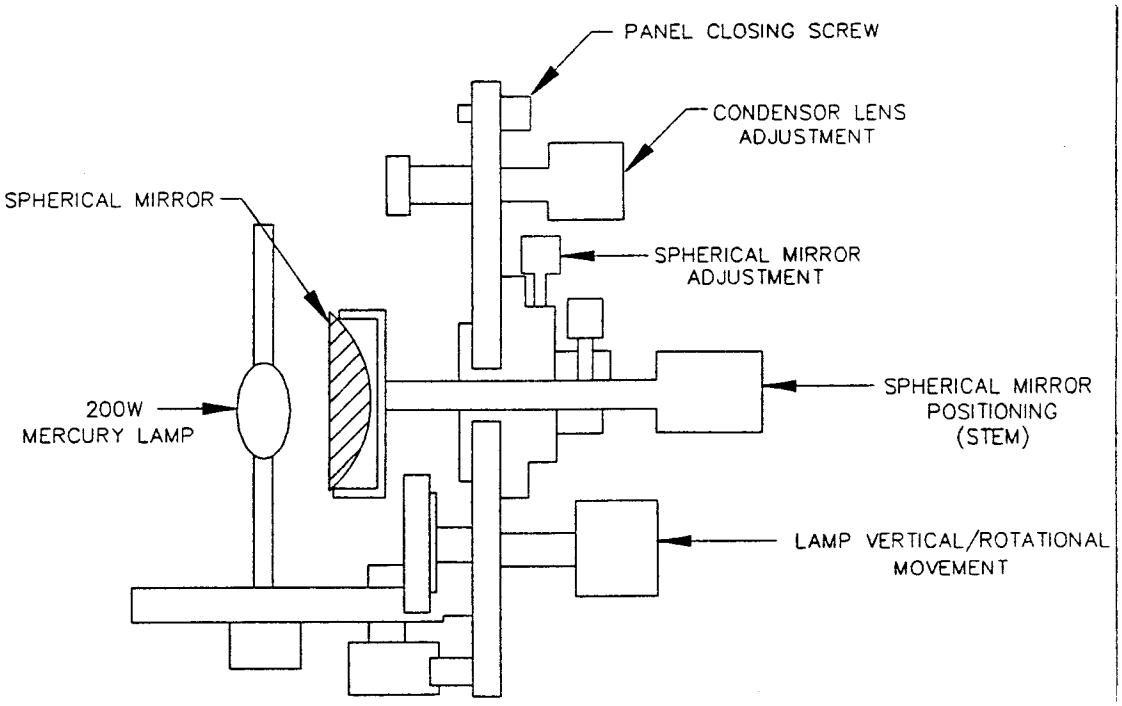

(b) Side View

Figure 4 - 7 200W Lamphouse Rear Access Panel

- With the access door in hand, observe the operation of the movements. Notice that the lamp is moved vertically by rotating the bottom knob. This knob turns a cam which pushes down a spring-loaded lamp mounting plate. The spring tension allows the lamp plate to move up against the cam. The knob to the left of the vertical adjusting knob also moves the same lamp plate. By turning this knob, the lamp mounting plate is rotated.

- To repair the two lamp movements, first remove the spring and screw on the rotational movement. While compressing the spring under the lamp mounting plate, remove the three beveled screws from the lower back side of the access door. This permits you to remove and inspect the parts.

- Clean out any old grease and re-lubricate if necessary with high temperature lubricant, SUSS 857A. Reassemble.

- Look at the mount of the spherical mirror; it is mounted on a stem that goes through the access door. Remove the mirror and its mount by turning it off the end of the stem. Next, remove the stem by taking out the thumb screw on the adjustment knob which allows you to pull the stem out from the access door. You are now left with a round housing on the back of the access door.

- Inside the housing are two small lead screws and one spring loaded piston. The screws push against the spring piston to position the mirror. Should they become bound up, they must be taken apart for repair. Three beveled screws hold this housing. Take out the three screws and clean all moving parts. Regrease with high temperature lubricant, SUSS 857A, if necessary, and then reassemble.

- Finish assembling the access door, then put it back on the lamphouse. Remember to replace the lamp cables.

4.8 MACHINE OPERATION SEQUENCE

The MJB 3 operates on relay logic and therefore is a sequentially operated machine. Before a program step can begin, the previous program step must be completed.

This section describes the operation of the MJB 3 in order of machine steps. The step approach is particularly useful in understanding the operation of the machine and can be used as a trouble shooting guide.

Start Mode: - machine power turned on.
- exposure program selected; in this case, use ST Hard Contact.
- mask and wafer loaded.

Operating Sequence:

1. Rotate the contact lever to the contact position, bringing the wafer into contact with the mask.

   a. As the lever is rotated, microswitch E1 is activated, firing V1 which applies vacuum to the bottom of the wafer.
   b. Microswitch E2 is activated, turning on V3 which activates the substrate clamping in the WEC head.
   c. Relay D1 is energized.

2. After the operator has aligned the wafer to the mask, the exposure button is pushed to initiate the exposure.

   a. Relay D3 is energized by pressing the exposure button.
   b. When relay D3 is energized, relay contacts d3/13 switch to d3/12, turning on V9 to lift the microscope.
   c. As the microscope rises, momentary switch E4 in the microscope lift mechanism is activated, energizing relay D2.
   d. When D2 is activated, relay contacts d2/13 switches to d2/12, turning off the vacuum under the wafer. At the same time V4 is turned on, supplying nitrogen to the back side of the wafer for "Hard Contact."
   e. Relay D2 energizes, also de-energizes V8 releasing the mirrorhouse from the rear position, and energizes V7 driving the mirrorhouse forward to the exposure position.

3. When the mirrorhouse reaches the forward position, microswitch E6 is activated.

   a. Microswitch E6 being activated in turn energizes the timer coil, starting the exposure timer and activating a mechanical switch in the timer.
   b. The activation of this timer switch energizes V14, opening the exposure shutter.
   c. When the timer times out, relay D2 is de-energized, turning off V14 and closing the exposure shutter.

4. When relay D2 is de-energized, the following occurs:

   a. Relay contact d2/22 switches to d2/21, de-energizing V7 which was holding the mirrorhouse in the forward position. This also energizes V8 which brings the mirrorhouse back to the rear position.
   b. As the mirrorhouse starts to move back, the contact on microswitch E6 is broken, removing the ground for the timer coil and resetting the timer.
   c. Relay contact d2/12 switches to d2/11, allowing V1 to re-energize, turning the vacuum back on under the wafer. The switching of these contacts also de-energizes V4, turning off the nitrogen to the bottom of the wafer.

5. As the mirrorhouse nears the rear position, microswitch E3 is activated momentarily, de-energizing relay D3.

   Relay contact d3/12 switches to d3/11, turning off V9, lowering the microscope and completing the exposure sequence.

NOTE: The machine will not continue its sequence if any of these steps do not occur.

4.8.1 Sensor List

Sensor	Location	Function
E1	stage, contact lever	turns on vacuum under wafer
E2	stage, contact lever	locks WEC head in contact
E3	mirrorhouse block	mirrorhouse in rear position
E4	microscope lift	microscope in up position
E5	stage, separation lever	acknowledges wafer separate from mask
E6	mirrorhouse block	mirrorhouse front position

Chapter 5

PREVENTIVE MAINTENANCE

5.0 PREVENTIVE MAINTENANCE

LUBRICATION CHART

The following is a list of lubricants, and where they are used on the MJB 3. All parts requiring lubrication must be clean before application of the lubricant. Only Karl Suss personnel or persons trained by qualified Karl Suss technical staff should attempt to lubricate any part of the machine.

Point of Lubrication	Suss Lubricant	Interval
Microscope Manipulator Slides (Ref: Sec. 4.4.2)	SUSS Lube Nyogel 795A (P/N 625MS006)	As necessary
Mirrorhouse Slide (Ref: Sec. 4.3.2)	SUSS Lube Rheolube 365 (P/N 625MS002)	6 months or as necessary
Brake Piston, WEC O-ring only (Ref: Sec. 4.2.2)	SUSS Lube Rheolube 365 (P/N 625MS002)	1 year or as necessary
Leveling Plate Contact Points (Ref: Sec. 4.2.3)	SUSS Lube Rheolube 365 (P/N 625MS002)	1 year when WEC PM is done
Stage Rotation Plate (Ref: Sec. 4.2.2)	SUSS Nyogel 779 (P/N 625MS005), or Instrument-Grade Oil (P/N 625MS004)	As necessary
Lamphouse Movements (Ref: Sec. 4.7)	High Temp. Grease 857A (P/N 625MS008)	As necessary

Chapter 6

REPLACEMENT PARTS IDENTIFICATION MANUAL

Chapter 7

ELECTRICAL AND PNEUMATIC DRAWINGS

Section A: 200W ST

Section B: 200W HP/ST

Section C: 350W HP/ST

Section D: IR Scanning Option

Chapter 7

ELECTRICAL AND PNEUMATIC DRAWINGS

Section A: 200W ST

Chapter 7

ELECTRICAL AND PNEUMATIC DRAWINGS

Section B: 200W HP/ST

Chapter 7

ELECTRICAL AND PNEUMATIC DRAWINGS

Section C: 350W HP/ST

Chapter 7

ELECTRICAL AND PNEUMATIC DRAWINGS

Section D: IR Scanning Option

SUSS MJB 3

MASK ALIGNER

Operator's Reference Manual

1. GENERAL DESCRIPTION AND PRINCIPLES OF OPERATION
2. OPERATING PROCEDURES
3. WARNINGS AND SAFETY HAZARDS
4. QUALITY STANDARDS
5. MAINTENANCE
6. INSTALLATION
7. WARRANTY AND LIMITATIONS
8. APPENDIX

This Operator's Reference Manual is subject to review and/or revision.

P/N 080AA261
1289

TABLE OF CONTENTS

SECTION			PAGE
1	**GENERAL DESCRIPTION AND PRINCIPLES OF OPERATION**		
1.1	The MJB 3 Series		1 - 1
	1.1.1	MJB 3 Standard	1 - 1
	1.1.2	MJB 3 HP/200W	1 - 1
	1.1.3	MJB 3 HP/350W	1 - 2
1.2	Exposure Optics		1 - 2
1.3	Exposure Programs		1 - 2
1.4	A Brief Orientation		1 - 5
1.5	The Subassemblies of the MJB 3		1 - 6
	1.5.1	Alignment Stage	1 - 6
	1.5.2	Machine Base	1 - 6
	1.5.3	Front Control Panel	1 - 6
	1.5.4	Manometer Box	1 - 6
	1.5.5	Microscope	1 - 6
	1.5.6	Lamphouse and Mirrorhouse	1 - 8
1.6	Special Features		1 - 8
	1.6.1	VACUUM CHAMBER Button	1 - 8
	1.6.2	Vacuum Chamber Adjustment	1 - 8
	1.6.3	Airing	1 - 9
	1.6.4	Variable Thickness Adjustment	1 - 9
	1.6.5	Nitrogen Loss Detector	1 - 9
	1.6.6	Infrared Viewing System for Backside Alignment (Optional)	1 - 9
2	**OPERATING PROCEDURES**		
2.1	Machine Controls		2 - 1
	2.1.1	Control Panel	2 - 1
	2.1.2	Alignment Stage	2 - 5
	2.1.3	Microscope Manipulator	2 - 6
	2.1.4	Microscope	2 - 6
	2.1.5	Manometer Box	2 - 7
2.2	Start Up Procedure		2 - 8
	2.2.1	Pre-Operation Check List	2 - 8
	2.2.2	Power Up	2 - 8
	2.2.3	Exposure Lamp Ignition	2 - 8
2.3	Operation		2 - 8
	2.3.1	Loading the Mask	2 - 8
	2.3.2	Loading the Substrate	2 - 9
	2.3.3	Aligning the Substrate to the Mask	2 - 9
	2.3.4	Exposure	2-10
	2.3.5	Unloading the Substrate	2-10

2.4 Exposure Mode Options 2-11
2.4.1 Vacuum Contact (High Precision) Mode 2-11
2.4.2 Standard (ST) Mode 2-11
2.4.2.1 Hard Contact 2-11
2.4.2.2 Soft Contact 2-12
2.4.2.3 Proximity Mode (Optional) 2-12
2.5 Adjustment Procedures 2-12
2.5.1 Vacuum Chamber Adjustment Procedure 2-12
2.5.2 Airing Feature Adjustment Procedure 2-13
2.5.3 Setting the Variable Thickness Adjustment 2-13

3 WARNINGS AND SAFETY HAZARDS

3.1 Electrical Precautions 3 - 1
3.2 High Pressure Lamps 3 - 1
3.2.1 Electrical Hazards 3 - 2
3.2.2 Lamp Explosion 3 - 2
3.2.3 Exhaust Requirements 3 - 2
3.2.4 Eye and Skin Safety 3 - 3
3.3 Broken Wafers 3 - 3
3.4 Moving Parts 3 - 3

4 QUALITY STANDARDS

4.1 Environment 4 - 1
4.2 Machine Checks and Adjustments 4 - 2
4.2.1 Light Intensity 4 - 2
4.2.2 Light Uniformity 4 - 2
4.2.3 Chucks and Maskholders 4 - 2

5 MAINTENANCE

5.1 General Maintenance 5 - 1
5.2 Replacement and Adjustment of Exposure Lamp:
Standard and HP Models Only 5 - 1
5.2.1 Lamp Replacement: Standard and HP Models Only 5 - 2
5.2.2 Intensity and Uniformity Adjustments and Measurements:
Standard and HP Models Only with 200W Lamphouse 5 - 3
5.2.2.1 Adjusting the Exposure Lamp 5 - 3
5.2.2.2 Intensity and Uniformity Measurements 5 - 4
5.2.3 Power Supply Calibration:
Standard and HP Models Only 5 - 5
5.3 Replacement and Adjustment of Exposure Lamp in the 350W Lamphouse:
Includes UV400, UV300, UV250, and UV200 Exposure Optics Only 5 - 5
5.3.1 Lamp Replacement: UV400, UV300, UV250, and UV200 5 - 6
5.3.2 Lamphouse Reassembly and Pneumatic Adjustments:
UV400, UV300, UV250, and UV200 Exposure Optics Only 5 - 7

5.3.3	Intensity and Uniformity Adjustments and Measurements: UV400, UV300, UV250, and UV200 Exposure Optics Only	5 - 7
5.3.3.1	Adjusting the Exposure Lamp	5 - 8
5.3.3.2	Intensity and Uniformity Measurements	5 - 9
5.3.4	Power Supply Calibration: UV400, UV300, UV250, and UV200 Exposure Optics Only	5 - 9
5.4	Exposure Optical System: UV400, UV300, UV250, and UV200 Exposure Optics	5-10
5.4.1	Optical System Components	5-10
5.4.2	Optical Components by Model	5-11
5.4.2.1	UV400 Optical Components	5-11
5.4.2.2	UV300 Optical Components	5-12
5.4.2.3	UV250 Optical Components	5-12
5.4.2.4	UV200 Optical Components	5-12
5.4.3	Changing from One Wavelength Range to Another	5-13
5.5	Setting Contact Pressure and Separation Stroke Using Dial Indicator Kit	5-16
6	**INSTALLATION**	
6.1	General	6 - 1
6.2	Receiving the Shipment	6 - 1
6.3	Installing the Equipment	6 - 1
6.4	Clearance Required for Crate	6 - 2
6.5	Environmental Requirements	6 - 2
6.6	Power Requirements	6 - 2
6.6.1	U.S. Market	6 - 2
6.6.2	International Market	6 - 2
6.7	Other Utility Requirements	6 - 3
7	**WARRANTY AND LIMITATIONS**	
7.1	Scope	7 - 1
7.2	Exposure Lamp Explosions	7 - 2
7.3	Who Is Protected	7 - 2
7.4	How To Receive Warranty Service	7 - 2
8	**APPENDIX**	
8.1	Discussion of Manual Alignment	8 - 1
8.2	Microscope Descriptions	8 - 2
8.2.1	SUSS Normalfield Microscope M400	8 - 2
8.2.1.1	Microscope Head and Eyepieces	8 - 2
8.2.1.2	Microscope Body	8 - 2
8.2.1.3	Objective Turret	8 - 2
8.2.1.4	Illuminator	8 - 3
8.2.1.5	Darkfield Illumination (if equipped)	8 - 3
8.2.1.6	Interference Contrast Illumination (if equipped)	8 - 3
8.2.1.7	Objectives	8 - 4

8.2.2	SUSS Splitfield Revolver Microscope: M200 - 200 Series		8 - 4
	8.2.2.1	Microscope Head and Eyepieces	8 - 4
	8.2.2.2	Microscope Body	8 - 4
	8.2.2.3	Illuminators	8 - 5
	8.2.2.4	Darkfield Illumination (if equipped)	8 - 5
	8.2.2.5	Interference Contrast Illumination (if equipped)	8 - 5
	8.2.2.6	Objectives	8 - 6
8.2.3	SUSS Splitfield Turret Microscope: M230 - 200 Series		8 - 6
	8.2.3.1	Microscope Head and Eyepieces	8 - 6
	8.2.3.2	Microscope Body	8 - 6
	8.2.3.3	Objective Turrets	8 - 7
	8.2.3.4	Illuminators	8 - 7
	8.2.3.5	Objectives	8 - 7
8.3	Scanning Infrared Viewing System for Backside Alignment (optional)		8 - 7
8.3.1	Alignment Stage		8 - 8
8.3.2	Microscope Manipulator		8 - 9
8.3.3	Electronics Control		8 - 9
8.3.4	IR Mode Operation		8-10
8.3.5	Non-IR Operation		8-11

LIST OF FIGURES AND ILLUSTRATIONS

FIGURE		PAGE
1-1	SUSS MJB 3 Standard With Splitfield Microscope	1 - 3
1-2	SUSS MJB 3 HP/200W With Normalfield Microscope	1 - 4
1-3	SUSS MJB 3 Machine Subassemblies	1 - 7
2-1	Front Control Panel	2 - 3
2-2	Alignment Stage	2 - 4
5-1	Lamphouse (Standard and HP/200W)	5 - 17
5-2	Lamphouse (Standard and HP/200W) Showing Adjustments	5 - 18
5-3	Exposure Optical System (Standard and HP)	5 - 19
5-4	Lamphouse (350W)	5 - 20
5-5	Exposure Optical System (UV400/300/250/200)	5 - 21
5-6	Dial Indicator Assembled on Machine	5 - 22
5-7	Separation Stroke Adjustments	5 - 23
6-1	Checklist for Machine Installation (U.S. Market)	6 - 4
6-2	SUSS MJB 3 Footprint	6 - 5
8-1	Normalfield Microscope M400	8 - 12
8-2	Magnification and Optical Data, SUSS M400 Microscope	8 - 13
8-3	Splitfield Microscope M200	8 - 14
8-4	Magnification and Optical Data, SUSS M200 Microscope	8 - 15
8-5	Magnification and Optical Data, SUSS M204 Microscope	8 - 16
8-6	Splitfield Revolver Microscope M230	8 - 17
8-7	Magnification and Optical Data, SUSS M230 Splitfield Microscope	8 - 18
8-8	SUSS MJB 3 Scanning IR System	8 - 19

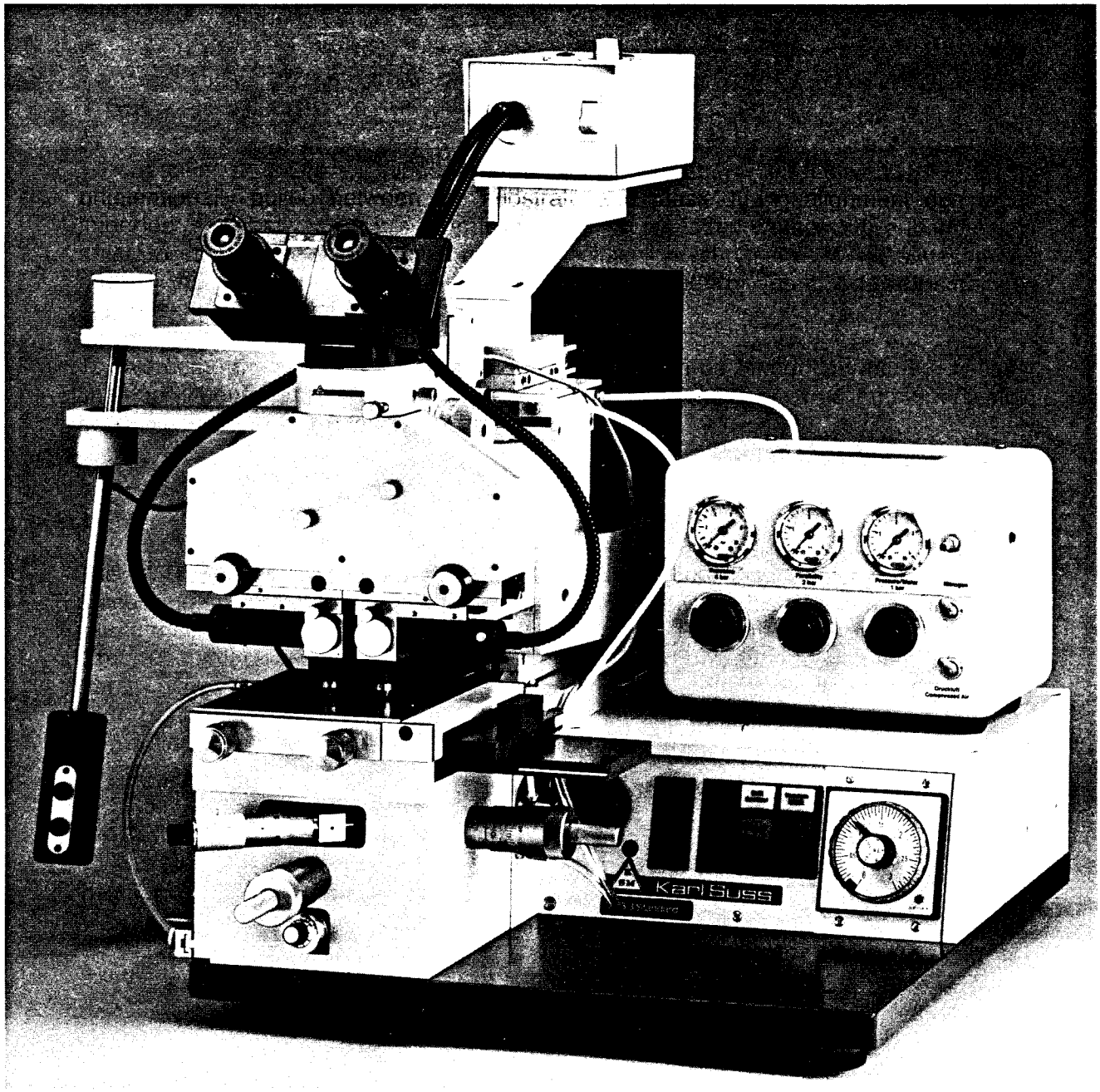

Figure 1 - 1 SUSS MJB 3 Standard with Splitfield Microscope

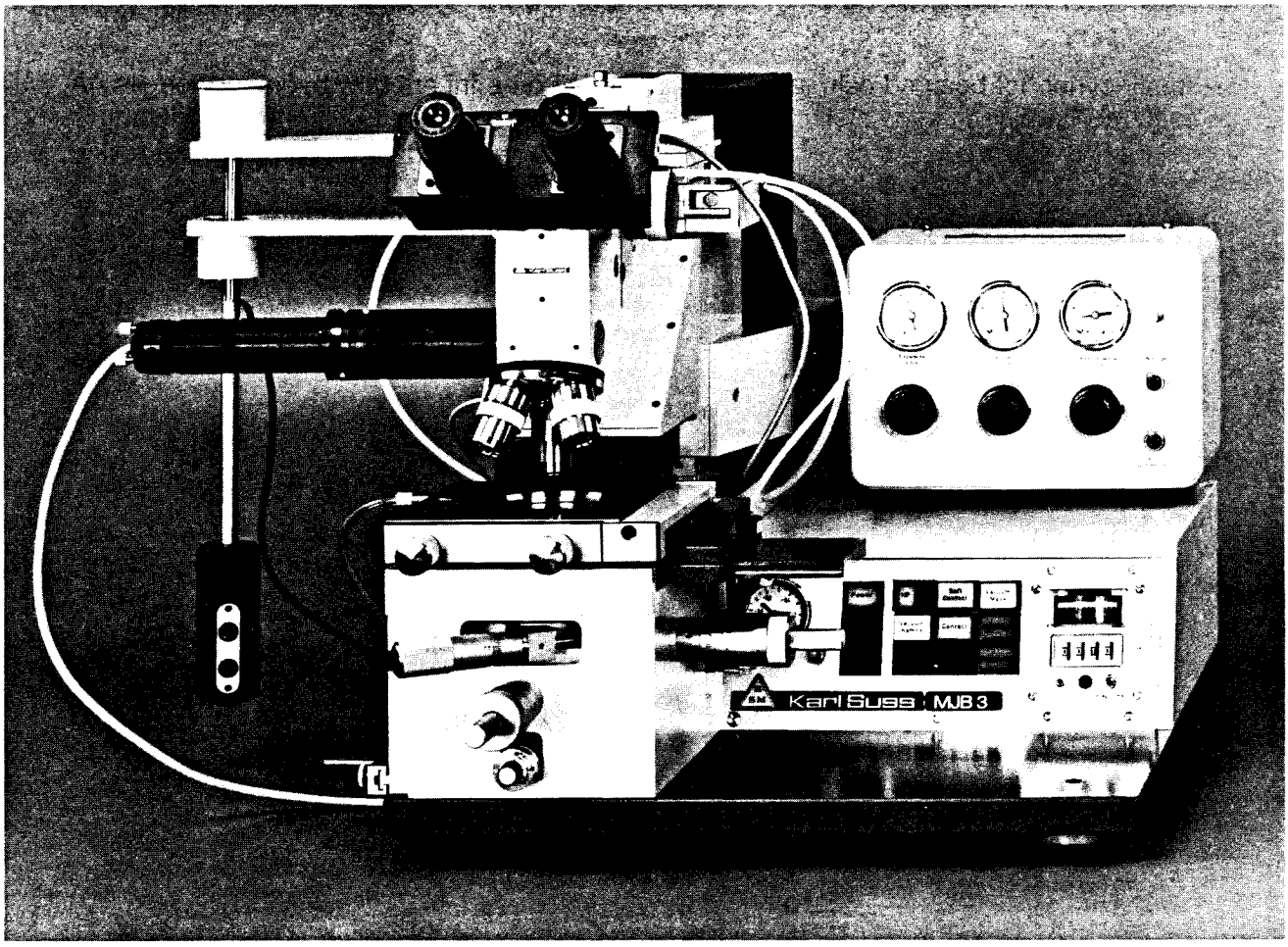

Figure 1 - 2 SUSS MJB 3 HP/200W with Normalfield Microscope

1 GENERAL DESCRIPTION AND PRINCIPLES OF OPERATION

The SUSS MJB 3 Mask Aligner is designed for high resolution photolithography in a laboratory, development or pilot production environment. The product line offers unsurpassed flexibility in the handling of irregularly shaped substrates and pieces of differing thicknesses, as well as standard size wafers up to 3" in diameter.

With the modular construction, the equipment lends itself to ease of service; functional groups are easily accessible and assemblies can be quickly modified or exchanged.

Various configurations can be ordered which are characterized by different light sources and alignment modes.

1.1 The MJB 3 Series

1.1.1 MJB 3 Standard

The MJB 3 Standard (Figure 1-1) is equipped with a 200W lamphouse containing a relatively simple but comparatively high resolution optical system. A 200W mercury short-arc lamp is used. Primary exposure wavelengths are 350-500nm (nanometers). The aligner performs exposures in hard contact mode (nitrogen pressure under the substrate) and soft contact mode (vacuum under the substrate). As an option, this model can also be equipped to perform proximity exposures. Line/space resolution of 1.5 microns and alignment accuracies of 0.2 micron can be obtained under optimum conditions.

1.1.2 MJB 3 HP/200W

The MJB 3 HP/200W (Figure 1-2) is equipped with the same optical system as the MJB 3 Standard, and can perform exposures in vacuum contact in addition to hard contact and soft contact, or in proximity (which is an option). It is equipped with a high precision alignment stage which allows alignment accuracies to 0.1 micron. Resolution of the MJB 3 HP/200W is 0.8 micron under optimum conditions.

1.1.3 MJB 3 HP/350W

The MJB 3 HP/350W has all the same features as the 200W version described in Section 1.1.2 except that it is equipped with a 350W lamphouse and diffraction reducing optics.

1.2 Exposure Optics

The exposure optics are divided into several wavelength regions:

UV 400 - The lamphouse is equipped with a 350W mercury high pressure lamp and diffraction optics. Usable wavelengths fall between 350 and 450nm. A resolution of 0.6 micron can be obtained under optimum conditions.

UV 300 - Using the same lamphouse as the UV 400 system and the 350W exposure lamp, the UV 300 is distinguished by optical filtering and a modified diffraction reducing lens plate. Usable wavelengths fall between 280 and 350 nm. A resolution of 0.4 micron can be obtained under optimum conditions.

UV 250 - The UV 250 system uses a 500W mercury xenon high pressure lamp as the light source. The diffraction reducing scheme is similar to that used in UV 400 and UV 300 systems but is optimized for wavelengths between 230 and 260 nm. A resolution of 0.3 micron can be obtained under optimum conditions.

UV 200 - A 350W cadmium xenon high pressure lamp functions as the light source in the UV 200 system. Diffraction reducing is very much like that used in the UV 250 but is optimized for wavelengths between 210 and 230nm. The highest resolution with considerable shorter exposure times, is obtained with an excimer laser as the light source. The laser source delivers 193 nm (ArF) or 248 nm (KrF) monochromatic light. A resolution of 0.2 micron can be obtained under optimum conditions.

1.3 Exposure Programs

The MJB 3 offers three exposure programs which can be selected with the HP (High Precision), ST (standard), and SOFT CONT. (soft contact) buttons. These buttons determine the sequence of events after the EXPOSURE button is pushed.

Vacuum Contact (HP) Mode - In the HP program, a vacuum is drawn between the mask and wafer prior to exposure. This mode allows the highest resolution since the gap between mask and wafer as a result of non-flatness, dust particles, etc. is minimized. Chucks equipped with vacuum gaskets must be used in this mode in order to obtain a vacuum between the substrate and the mask.

Standard (ST) Hard Contact Mode - During exposure, the vacuum holding the substrate to the chuck is switched off and positive nitrogen pressure is used to press the substrate against the mask.

Soft Contact Mode - When the ST and SOFT CONT. buttons are illuminated simultaneously, the soft contact mode is selected and the substrate is held to the mask just by the mechanical pressure of the chuck throughout the exposure. The vacuum holding the substrate to the chuck remains on.

Proximity (Optional) - If the machine is equipped with a button marked PROXIMITY, and the ST mode is selected, exposures may be made with a small gap between the mask and substrate. This proximity gap is determined by the position of the separation lever.

1.4 A Brief Orientation

The operation of the MJB 3 is straightforward and easy to learn. First, load a mask into the machine. Then place the substrate on the chuck and insert the chuck into the alignment stage.

At this point bring the substrate into contact with the mask by turning the contact lever counterclockwise. The CONTACT light on the front panel illuminates. This operation also accomplishes wedge error (parallelity) compensation (WEC) using a unique 3-point leveling approach.

By pulling the separation level towards the front of the machine, the operator obtains sufficient separation for alignment, and the CONTACT light will go out as the SEPARATION light illuminates. The substrate can now be aligned to the mask using the X, Y, and Theta micrometers. The operator can easily scan the microscope over the substrate in either the X or Y direction, or both simultaneously, by using the precision microscope manipulator.

When satisfactory alignment has been achieved, move the substrate back into contact with the mask by pushing the separation lever all the way to its rearmost position until the SEPARATION light goes out and the CONTACT light re-illuminates. The substrate is now ready for exposure.

To initiate exposure, set the exposure time on the timer and press the EXPOSURE button. In most models, the microscope will then elevate a sufficient distance to allow the objective to clear the maskholder (this lifting is not necessary in all cases). The mirrorhouse now moves forward over the mask. When the mirrorhouse reaches its foremost position, the shutter opens and exposure takes place for the specified amount of time. After exposure is complete, the shutter closes, the mirrorhouse retracts, and the microscope moves back down to its original position.

The substrate may now be unloaded. Rotate the contact lever fully towards the front of the machine, releasing the substrate from the mask. Pull the transport slide to the right and carefully remove the substrate from the chuck.

1.5 The Subassemblies of the MJB 3

The MJB 3 is made up of discrete subassemblies (Figure 1-3) as follows:

1.5.1 Alignment Stage

The alignment stage is the heart of the MJB 3, and consists of the pneumatics and mechanics for mask/substrate parallelity compensation and mask and substrate vacuum, maskholder (and maskholder clamping mechanism), Z-axis movement, alignment separation mechanism, X, Y, and Theta alignment micrometers, and variable thickness adjustment.

1.5.2 Machine Base

The base contains the relays, pneumatics, valves, and throttles which control the various machine functions.

1.5.3 Front Control Panel

The front control panel (Figure 2-1) contains the indicators and operating controls, including the CONTACT and SEPARATION indicator light, HP/ST exposure mode selection button (except MJB 3 Standard), SOFT CONTACT exposure mode button, VACUUM MASK button, optional PROXIMITY button, VACUUM CHAMBER button (except MJB 3 Standard) and the exposure timer. A vacuum gauge and throttle for adjusting the vacuum chamber vacuum are located at the left end of the front panel except on the MJB 3 Standard which has no vacuum chamber.

1.5.4 Manometer Box

The manometer box contains the gauges, regulators and throttles for adjustment of compressed air and nitrogen to the machine.

1.5.5 Microscope

The microscope assembly consists of the microscope adapter, microscope manipulator, and the microscope itself. Many microscope options are available, including normalfield, splitfield, and objective revolvers, as well as brightfield, darkfield, and interference contrast illumination.

The microscope manipulator is equipped with pneumatic brakes which are unlocked by pressing the buttons on the manipulator handle. Press just one button to select an X–only or Y–only scan. If both buttons are pressed simultaneously, the microscope can be scanned in any direction.

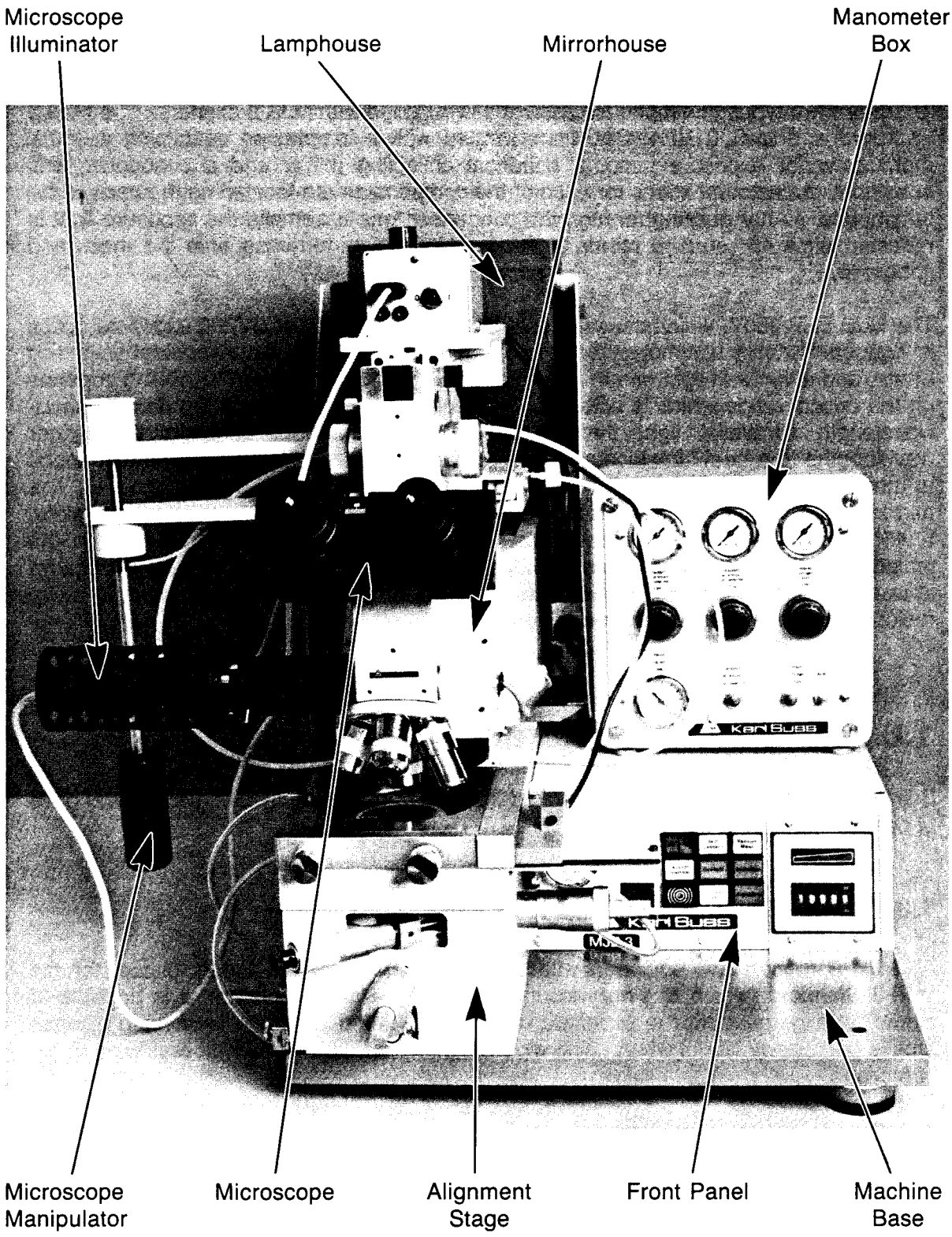

Figure 1 - 3 SUSS MJB 3 Machine Subassemblies

1.5.6 Lamphouse and Mirrorhouse

There are two types of lamphouse assemblies supplied with MJB 3 aligners. The MJB 3 Standard and MJB 3 HP/200W are equipped with a lamphouse containing a 200W mercury vapor exposure lamp, a spherical collecting mirror and a condenser lens assembly. Adjustment knobs for each of the components are located on the back of the lamphouse. After passing through the condenser lens assembly, the exposure light is reflected off a 45° surface mirror at the front of the mirrorhouse onto the mask and substrate.

The MJB 3HP/350W which uses the UV400, UV300, UV250, or UV200 exposure optics is equipped with a lamphouse containing an exposure lamp, an ellipsoidal collecting mirror, and a 45° cold light mirror. The type of exposure lamp (350W or 500W) depends on the optical range which is selected. The cold light mirror reflects the desired short-wavelength ultraviolet light through a fly's eye lens and transmits the longer wavelengths to a heat sink located in the bottom of the lamphouse. Adjustment knobs to move the lamp in X, Y, and Z are located on the front face of the lamphouse. The mirrorhouse and lamphouse contain a condenser lens, a diffraction reducing lens plate, a 45° surface mirror and a collimation lens. An extra frame is provided in the lamphouse tube for a filter (when required). The SUSS diffraction reducing exposure system provides very high resolution over the entire exposure area, resulting in steep resist edges and minimal diffraction effects.

1.6 Special Features

Several special features are incorporated into the MJB 3 to enhance flexibility and ease of operation.

1.6.1 VACUUM CHAMBER Button

All MJB 3 models are equipped with a VACUUM CHAMBER button, except for the MJB 3 Standard (which has no vacuum chamber). With this feature, it is possible to check the alignment prior to exposure with the mask and substrate in vacuum contact. This is particularly useful when using high magnification objectives with restricted depth of focus.

1.6.2 Vacuum Chamber Adjustment

The vacuum chamber is adjustable in all MJB 3 models except the MJB 3 Standard. Under certain circumstances, the operator may wish to expose substrates in vacuum contact mode with less than full vacuum in the vacuum chamber. For this purpose a vacuum gauge and adjustment throttle are provided on the left side of the front control panel. This adjustment does not affect the amount of vacuum under the substrate during alignment. Instructions for setting the vacuum level can be found in Section 2.5.1.

The vacuum gauge can also be used to detect vacuum leaks in the vacuum chamber caused by damaged chucks, vacuum gaskets, etc.

1.6.3 Airing

When using a chuck equipped with a vacuum gasket, a partial vacuum may be unintentionally pulled between the substrate and mask during alignment due to an imperfect seal between the substrate and the chuck; this causes the substrate and mask to stick together and make alignment difficult or impossible. The situation can occur if the back side of the substrate is unusually rough or scratched, or if scratches are present in the chuck surface.

To overcome the problem, a small flow of nitrogen can be introduced into the vacuum chamber whenever the substrate is separated from the mask. Instructions for adjusting the nitrogen flow can be found in Section 2.5.2.

1.6.4 Variable Thickness Adjustment

The MJB 3 is equipped with a device to maintain constant contact pressure when processing substrates of various thicknesses. Alternatively, this device may be used to vary the contact pressure for a given wafer thickness. When the equipment is installed, a reference mask and wafer are used to set the contact pressure between the mask and wafer. This setting may be varied using the thickness adjustment knob located on the front of the stage near the bottom of the machine (Figure 2-2). For a detailed description of how to set the contact pressure, refer to Section 2.5.3.

1.6.5 Nitrogen Loss Detector

In the MJB 3HP/350W, the exposure lamp is cooled by nitrogen. In the event of a nitrogen loss, the monitoring system causes the NITROGEN LOSS button to flash, and an audible alarm to sound. After approximately 3 minutes, the machine will automatically turn off the exposure lamp if the nitrogen supply has not been restored.

1.6.6 Infrared Viewing System for Backside Alignment (optional)

The MJB 3 may be equipped with a video camera, monitor, and special tooling to enable backside alignment and printing. For this application, special chucks are provided. An IR wand with a halogen light source is located below a filter plate to which the substrate is held by vacuum. The video camera is mounted on the alignment microscope using a trinocular microscope head. The image tube employed in the camera depends on the transmission characteristics of the substrate material.

For materials transparent to wavelengths below 1100nm (such as GaAs), a high quality camera having good response both in the short IR and the visible regions is used. For materials which are only transparent at longer IR wavelengths (such as InSb), a lead sulfide infrared tube is available. This tube has good response at the longer wavelengths but somewhat less resolution and more "lag" (persistence of previous image and delay in displaying a new image on the monitor). For the sake of economy, a true infrared tube is used only where absolutely necessary.

An aligner equipped with the infrared viewing system may also be used for conventional alignment by changing the chuck and other small mechanical components. This takes only a few minutes.

A more detailed description about the operation of the infrared viewing system can be found in the Appendix (Chapter 8).

2 OPERATING PROCEDURES

2.1 Machine Controls

All of the machine controls for the SUSS MJB 3 are described below.

2.1.1 Control Panel (Figure 2-1)

a. POWER button - Pressing the POWER button switches on the mask aligner. When the machine is powered or ON, the POWER button is illuminated.

b. CONTACT indicator - The CONTACT indicator is illuminated whenever both the contact lever and the separation lever are in the contact position. The substrate is then in contact with the mask. **Do not perform alignment when the contact indicator is lit.**

c. SEPARATION indicator - This indicator is illuminated when the contact lever is in the contact position and the separation lever is in the separation position. The substrate is then separated from the mask by a small distance to allow alignment to be performed. Exposure is not possible in this condition unless the aligner is equipped with a PROXIMITY button. (See Section 2.4.2.3)

d. EXPOSURE button - Pressing the EXPOSURE button initiates exposure and illuminates the button until exposure has been completed. The exposure time is determined by the setting on the exposure timer.

e. VACUUM MASK button - Pressing the VACUUM MASK button switches on the mask vacuum at the maskholder and illuminates the button.

f. VACUUM CHAMBER button - All MJB 3 machines are equipped with a VACUUM CHAMBER button except for the MJB 3 Standard which does not have a vacuum chamber. In the vacuum contact High Precision (HP) mode, the vacuum between mask and substrate is automatically pulled just before exposure. (Refer to Section 2.4.1 for a description of the HP mode.) However, it is possible to check the alignment with the mask and substrate in vacuum contact prior to making an exposure. This feature is particularly useful when using high magnification objectives with restricted depth of focus. Simply press the VACUUM CHAMBER button after moving the substrate to the contact position using the separation lever (CONTACT indicator illuminated), and the

vacuum will be pulled. The vacuum can be released by moving the separation lever to the separation position. If the EXPOSURE button is pressed while the VACUUM CHAMBER button is illuminated, the vacuum between mask and substrate is still preserved and exposure takes place in normal fashion.

g. HP/ST button - All MJB 3 models except the MJB 3 Standard are equipped with an HP/ST button which is used to select either vacuum chamber exposure mode (HP) or standard exposure mode (ST). The appropriate indicator light is illuminated to indicate the exposure mode selected. (Refer to Sections 2.4.1 and 2.4.2 for descriptions of the HP and ST exposure modes.)

h. SOFT CONTACT button - The SOFT CONTACT button is used to select the soft contact exposure mode. In this mode, the substrate is leveled against the mask, and the vacuum under the substrate remains on during exposure. To select soft contact exposure mode, the HP/ST button must be in the ST position.

i. PROXIMITY button (optional) - If the aligner is equipped with a button marked PROXIMITY on the front panel, exposures may be made with a small gap between the mask and the substrate. This proximity gap is determined by the position of the separation lever, and may be adjusted to a maximum distance of 50 microns, depending on the setting of the separation lever range. (A proximity gap of up to 150 microns can be achieved by ordering an optional lead screw when configuring the machine.) When the PROXIMITY button is pressed, it illuminates and defeats the interlock which normally prevents exposure unless the separation lever is in contact position. To select proximity exposure modes, the HP/ST button must be in the ST position.

> NOTE: Even when using the proximity exposure mode, two contacts will be made between mask and substrate: (1) prior to alignment in order to perform mask to substrate parallelity compensation, and (2) after exposure, when the parallelity compensation head brakes are switched off and the wedge head returns to its normal position.

j. Mechanical Exposure Timer - The exposure timer is located on the right side of the front panel. In order to set the timer, two controls are used: an inner knob marked "s", "10s", "m", "10m", "h", and "10h" (for seconds, minutes, and hours) which is used to set the multiplier, and an outer ring which is used to move the timer pointer. The scale for the timer pointer is graduated from 0 to 3. The exposure time is determined by multiplying the pointer setting by the multiplier set on the inner knob. The timer therefore has a range of 0.1 seconds to 30 hours. When the EXPOSURE button is pressed, the timer pointer rotates counterclockwise to 0 during exposure.

Example 1: To obtain an exposure time of 2 seconds, set the timer pointer at 2 and the multiplier to "s".

Example 2: To obtain an exposure time of 8 minutes, set the timer pointer to 0.8 and the multiplier to "10m".

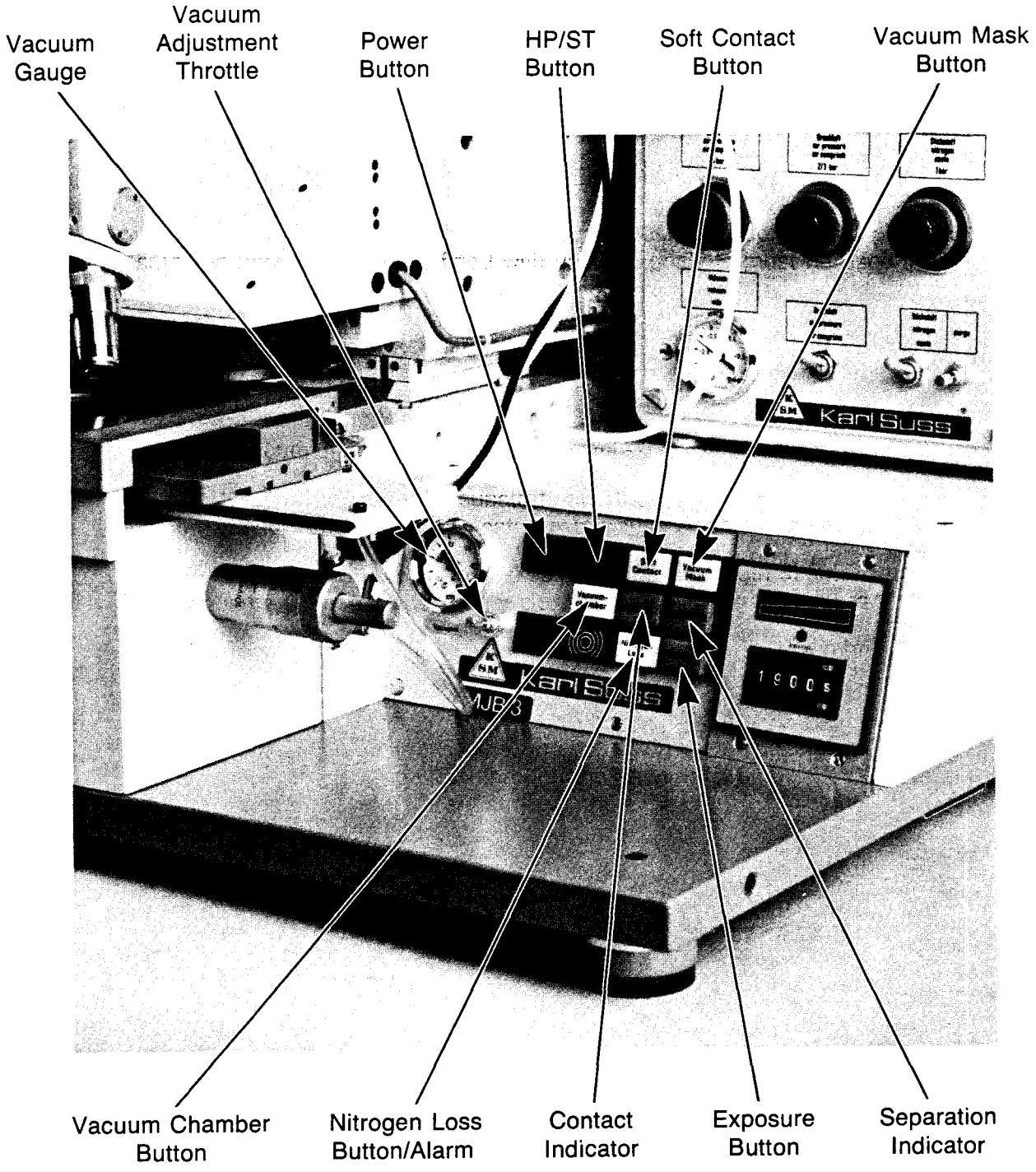

Figure 2 - 1 Front Control Panel

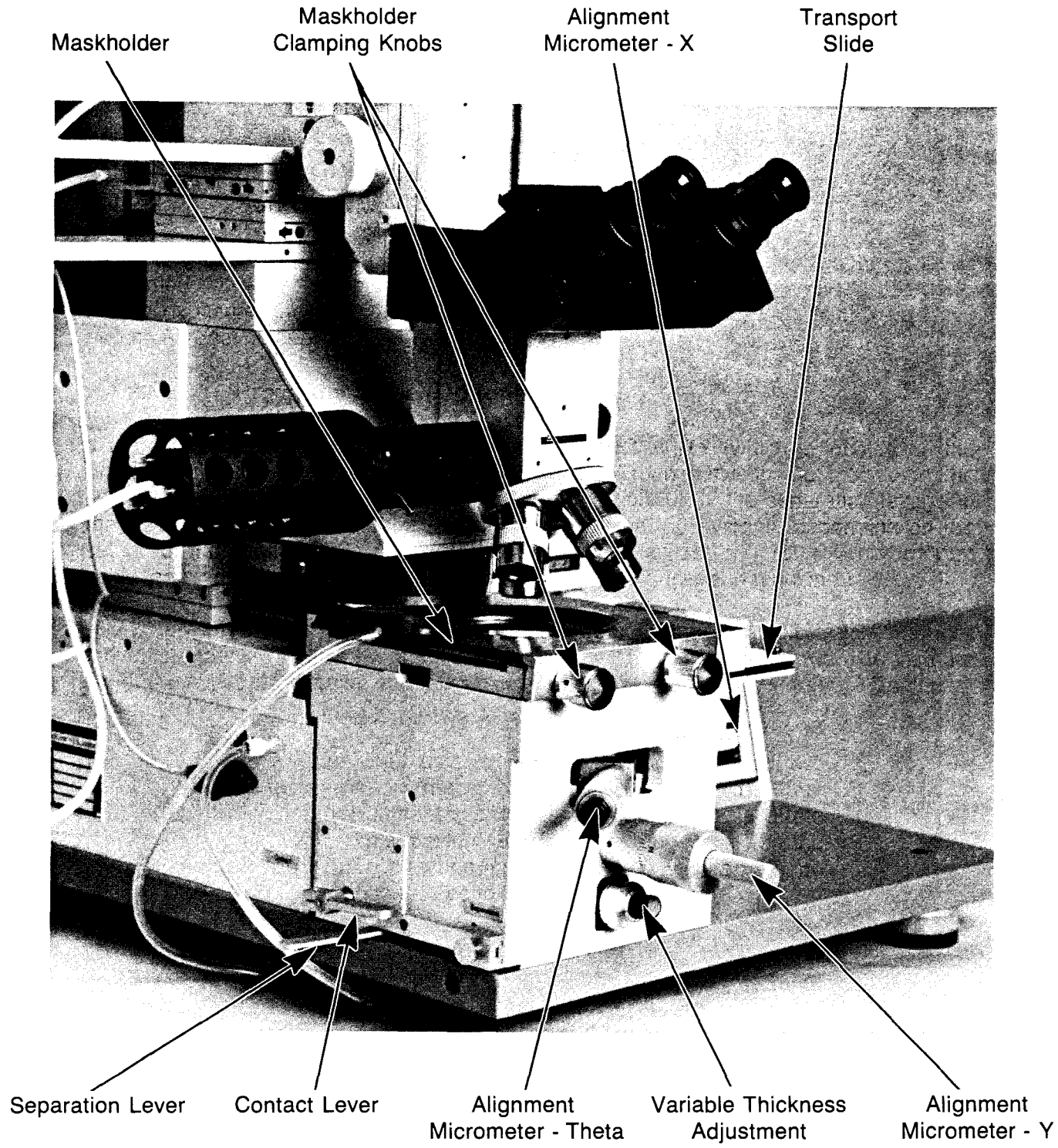

Figure 2 - 2 Alignment Stage

k. Electronic Exposure Timer - The MJB 3 may be equipped with an electronic rather than a mechanical exposure timer. If the machine has an electronic timer, set any exposure time from .01 seconds to 99 hours by pressing the red selector button on the right side of the timer to select "S" for seconds, "M" for minutes, and "H" for hours. Then use the digital switches located beneath the timer display to enter the desired exposure time.

l. Vacuum Gauge and Vacuum Adjustment Throttle - The vacuum gauge and the vacuum chamber adjustment throttles are located on the left end of the front panel for all MJB 3 models except the MJB 3 Standard where they are unnecessary. They are used to adjust the vacuum level in the vacuum chamber during exposure. This setting has no effect on the vacuum under the substrate during alignment. For instruction on setting the vacuum level, refer to Section 2.5.1.

m. NITROGEN LOSS button and alarm - The NITROGEN LOSS button and alarm are located at the lower center of the front panel on all MJB 3 models except the MJB 3 Standard or MJB 3HP/200W where they are unnecessary. The button is a latching type pushbutton that contains an indicator lamp; the alarm sounds a pulsating tone. The system monitors the flow of nitrogen used to cool the exposure lamp base. If the flow rate falls below a preset level, the system will be activated. If the NITROGEN LOSS button is in the "out" position, the button will flash and the alarm will be heard. If the NITROGEN LOSS button is in the depressed or "in" position, the button will flash, but the alarm will not sound. In either case, if nitrogen is not returned within approximately 3 minutes, the exposure lamp power supply will be automatically turned off, thereby significantly reducing the possibility of a lamp explosion due to overheating.

2.1.2 Alignment Stage (Figure 2-2)

a. Transport Slide - The transport slide is located near the top of the stage at the right hand side of the machine and is used to transport the chuck and substrate from the loading position into the stage.

b. Alignment Micrometers (X, Y, and Theta) - The Y and Theta alignment micrometers are located on the front of the alignment stage while the X micrometer is mounted on the right side. They are used during alignment to move the substrate in relation to the mask. The X and Y micrometers have both coarse and fine adjustment. The range of adjustment in X and Y is 6.0 mm and the pitch of the micrometer lead screws is 1.0 mm (coarse adjustment) and 0.05 mm (fine adjustment). The Theta (rotation) micrometer has a range of 30° with a pitch of 0.5 mm for the MJB Standard and 0.25 mm for the other models.

c. Contact Lever - The contact lever, which controls the Z-axis movement of the chuck, is located at the lower left side of the stage. After inserting a chuck and substrate into the stage using the transport slide, the contact lever is used to bring the substrate into contact with the mask for parallelity compensation.

d. Separation Lever - The separation lever is also located at the lower left side of the stage. This lever is used to move the substrate in and out of contact with the mask in order to perform alignment, once the contact lever has been engaged. Exposure can only be initiated when the separation lever is in the contact position (unless using the optional PROXIMITY program.)

e. The maskholder is securely clamped in the mask holder frame on the top of the stage using two knurled knobs. It is removed and reinserted into the maskholder frame from the left side of the stage.

f. Variable Thickness Adjustment - The variable thickness adjustment is located on the front of the stage immediately below the Y-micrometer. At the time of installation, the Z-travel of the stage is adjusted using a reference substrate and mask. If substrates or masks of different thicknesses are to be used, this thickness difference must be compensated for, using the variable thickness adjustment. This adjustment procedure is described in Section 2.5.3.

g. Nitrogen Purge - For work with negative resist, the stage is equipped with a purge which flushes the wafer and mask area with nitrogen to reduce the "oxygen effect". The nitrogen is introduced through a number of small holes in the back of the maskholder frame. The purge volume is adjusted using the throttle located on the lower right corner of the manometer box. (IR machines do not include this feature.)

2.1.3 Microscope Manipulator

The microscope manipulator, which controls the movement of the microscope over the alignment stage, is located on the left side of the machine. The manipulator rides on X–Y slides which are equipped with pneumatic brakes and mounted to the top of the mirrorhouse assembly. Two buttons located on the manipulator handle are used to unlock either or both brakes, thereby enabling the microscope to be scanned in either the X or Y directions exclusively, or in both directions simultaneously.

2.1.4 Microscope

The microscope is mounted on the MJB 3 by means of a microscope adapter which includes mechanical mounting parts, and a focusing rack. The focusing rack consists of a combined coarse/fine adjustment to allow rapid focusing of the microscope image. If the focus adjustment knob is turned in one direction only, the coarse focusing motion is in effect. The fine adjustment is automatically engaged as soon as the slightest turn is made in the opposite direction. The adjustment will switch back to the coarse focusing mode when the limits of fine adjustment are exceeded.

In addition, the microscope lift (if the microscope adapter is so equipped) raises the microscope to provide clearance between the objectives of the microscope and the maskholder. This lifting action will be automatically performed by the machine whenever the mirrorhouse travels to the front of the machine.

A number of microscope options are offered in both normalfield and splitfield types. The three basic configurations are described below. A more detailed description of the microscope supplied with your equipment may be found in the Appendix.

a. Splitfield Microscope - SUSS M200 - 200 Series (Figure 8-1)

The M200 microscope consists of the microscope head (either binocular or trinocular), eyepieces, microscope body, illuminator, and objectives. The choice of eyepieces and objectives depends upon the magnification desired. The objective separation distance is adjusted by using the two combination objective separation knobs which also adjust the fine focus. Two small knobs on the front of the body of the microscope are used to select either singlefield or splitfield operation.

b. Splitfield Revolver Microscope - SUSS M230 - 200 Series (Figure 8-2)

The M230 microscope is similar to the M200 except that it is supplied with three pairs of objectives. Locking screws located in the revolver mount dovetail allow the revolver to be rotated without changing the objective separation distance.

c. Normalfield Microscope - SUSS M400 (Figure 8-3)

The M400 microscope consists of the microscope head (either binocular or trinocular), eyepieces, microscope body, illuminator, objective turret, and objectives. It is offered in three versions: brightfield only, brightfield/darkfield, and an interference contrast combination of brightfield and darkfield. Interference contrast illumination is obtained, using an interference contrast objective, by inserting the analyzer and the polarizer into the illumination path. Darkfield illumination is achieved, using a darkfield objective, by inserting the darkfield stop into the light path.

2.1.5 Manometer Box

The manometer box contains the gauges and regulators used to control the machine pneumatics. There are three pressure gauges labelled Air Pressure (4 bar), Air Pressure (2 bar), and Nitrogen. These should be set at 4 bar (60 psi), 2 bar (30 psi), and 1 bar (15 psi) respectively, using the regulators located under each gauge. With the exception of parallelity compensation, the left Air Pressure Regulator located beneath the gauge labelled Air Pressure (4 bar) controls the pressure used for all machine functions controlled by air pressure (mirrorhouse movement, microscope lift and manipulator brakes, lamphouse heat sink cooling, etc.)

The Air Pressure Regulator which is located beneath the gauge labelled Air Pressure (2 bar) controls the pressure in the bladder ring located under the parallelity (wedge error) compensation plate.

The Nitrogen Regulator controls the nitrogen pressure to the machine. Nitrogen is used for lamp base cooling in the MJB 3/350W lamphouse, pressure under the wafer in standard exposure mode, the airing function, the nitrogen purge function, and to separate the wafer from the mask after exposure. Two pneumatic switches which control the compressed air and nitrogen supplies are located below the gauges and regulators, along with a throttle which is used to control the nitrogen purge to the wafer stage for work with negative resist. A gauge to show the vacuum supplied to the machine is situated at the bottom left of the manometer box.

2.2 Start Up Procedure

2.2.1 Pre-Operation Check List

Before starting the MJB 3, it is important to:

a. Switch on the nitrogen and compressed air (manometer box) and adjust the regulators to the proper settings (if necessary).

b. Switch on the vacuum to the machine.

2.2.2 Power Up

Assuming that the exposure lamp power supply is on and already in operation, turn on the MJB 3 by pressing the POWER button. The button will illuminate.

2.2.3 Exposure Lamp Ignition

If the exposure lamp power supply is not on, the MJB 3 main power should be off before switching on the power supply. The lamp ignition sequence is as follows:

a. Check that the machine is turned off.

b. Switch on the POWER to the exposure lamp power supply.

c. Press the lamp START button and release. If the lamp does not ignite after the firing sequence, press the button again.

d. For more detailed information about setup and operating procedures, refer to the Operator's Reference Manual for the Constant Intensity Controller (power supply).

2.3 Operation

2.3.1 Loading the Mask

NOTE: It is extremely important at all times to avoid scratching chucks and maskholders.

To load a mask into the machine, first loosen the two knurled knobs which clamp the maskholder onto the stage and withdraw the maskholder. Carefully place the maskholder on a flat surface, with the vacuum groove facing up.

Check that the MASK VACUUM button on the front panel is in the extended or off position. Place the mask on the maskholder with the patterned side up and then press the MASK VACUUM button. This will fix the mask to the maskholder by vacuum. Now invert the maskholder and reinsert it into the stage. Clamp the maskholder securely in place using the two knurled knobs.

2.3.2 Loading the Substrate

Place the substrate on the chuck, ensuring that it completely covers all the vacuum holes. Insert the chuck into the stage by carefully pushing the transport slide to the left until it reaches the stop. Bring the substrate into contact with the mask by rotating the contact lever 180° counterclockwise (toward the rear of the machine). The CONTACT indicator on the front panel will illuminate.

Where an MJB 3 is used in the standard exposure mode **with a standard chuck,** the operator may take advantage of the pre-vacuum feature when inserting the chuck into the stage. After the substrate is placed on the wafer chuck, squeeze the button on the front of the finger grip located at the right edge of the transport slide. This causes a vacuum to hold the wafer to the chuck during transport to the stage. Once the chuck is fully inserted into the stage, rotate the contact lever as above and release the pre-vacuum button.

> NOTE: The pre-vacuum feature will **only** function in the standard exposure (ST) mode with a standard chuck.

2.3.3 Aligning the Substrate to the Mask

First, select the exposure mode desired. Then focus the microscope on the mask and substrate using the focus adjustment knobs. If the microscope is equipped with an objective revolver, a low magnification objective should be used for coarse alignment and the magnification steadily increased until satisfactory alignment is obtained. In order to align the substrate, it must first be separated from the mask. Pull the separation lever toward the front of the machine until sufficient separation is obtained. The CONTACT indicator will go out and the SEPARATION indicator will illuminate. (The range of the separation stroke is adjustable and is set at the time of installation.) Now align the substrate to the mask using the X, Y, and Theta micrometers. The X and Y micrometers are equipped with both a coarse and fine adjustment.

If the aligner is equipped with a normalfield microscope, alignment is performed by scanning the microscope back and forth in either the X or the Y direction. The microscope manipulator is equipped with pneumatic brakes which are unlocked by pressing the buttons on the manipulator handle. Select either an X-only or Y-only scan by pressing just one button.

If the aligner is equipped with a splitfield microscope, the two objectives are aligned to two alignment features on opposite sides of the substrate using the microscope

manipulator and the objective separation controls. In this case, it is not necessary to scan the microscope across the mask during substrate alignment.

When satisfactory alignment is obtained, move the substrate back into contact with the mask by pushing the separation lever all the way to its rearmost position. The SEPARATION light will go out and the CONTACT light will illuminate.

When using high magnification, it is possible that the alignment position may be seen clearly only in the contact position because of depth of focus restrictions. If the alignment is unsatisfactory in contact position, repeat the alignment sequence until correct alignment is obtained.

For more detailed information, refer to the application note on alignment in the Appendix (Chapter 8).

2.3.4 Exposure

The substrate is now ready for exposure. (Exposure mode should be selected **before** alignment.) Set the exposure time on the timer located at the right end of the front panel. Sections 2.1.1.j or 2.1.1.k provide instructions on setting the timer.

Press the EXPOSURE button. (On some microscopes, the working distance of the high magnification objectives is so small that the objective extends into the maskholder opening when focused on the mask. In these cases, the microscope adapter on which the microscope is mounted is equipped with a lift mechanism.) When the EXPOSURE button is pressed, the microscope will first elevate an amount sufficient to allow the objective to clear the maskholder.

The mirrorhouse then moves forward into position over the mask. When the mirrorhouse reaches the foremost position, the exposure shutter opens and exposure takes place for the amount of time set on the exposure timer. After exposure, the shutter closes and the mirrorhouse automatically retracts. The microscope lift is then released and the microscope moves back down to its original position.

2.3.5 Unloading the Substrate

With exposure complete, the substrate may now be unloaded. Rotate the contact lever 180° clockwise (toward the front of the machine), which releases the substrate from the mask. Pull the transport slide to the right and carefully remove the substrate from the chuck.

2.4 Exposure Mode Options

2.4.1 Vacuum Contact (High Precision) Mode

In the HP mode, a vacuum is pulled between the mask and the substrate just before exposure. The highest possible resolution is obtained in this mode since the gap between substrate and mask (which is caused by flatness variations, dust particles, etc.) is as small as possible. Chucks fitted with vacuum gaskets must be used in this mode in order to obtain a vacuum between the substrate and the mask. Vacuum contact mode is not an option on the MJB 3 Standard model.

When printing in the vacuum contact mode, the following sequence of events occurs after the EXPOSURE button is pressed:

a. The vacuum under the substrate is switched off.

b. The vacuum between the substrate and the mask is switched on through the vacuum chamber hole located at the outer edge of the chuck.

c. The shutter opens, exposure takes place for the length of time set on the exposure timer, and the shutter closes, completing the exposure.

d. The vacuum between the substrate and the mask is switched off.

e. The vacuum under the substrate is switched on.

f. When the operator moves the contact lever to unload the substrate, a nitrogen burst is introduced through the vacuum chamber hole, breaking the vacuum between the substrate and the mask.

2.4.2 Standard (ST) Mode

In the ST mode, one of two (Standard or Soft Contact) exposure programs can be selected; this allows the greatest amount of flexibility in the use of the machine. Only chucks without vacuum gaskets should be used in the ST mode of operation.

2.4.2.1 Hard Contact

If the ST mode is illuminated, and both the SOFT CONTACT and PROXIMITY (if so equipped) buttons are not, exposure will be performed with nitrogen pressure pressing the substrate against the mask. The sequence of events after the EXPOSURE button is pushed is as follows:

a. The vacuum under the substrate is removed.

b. Nitrogen pressure is applied under the substrate. (This is adjustable by using throttle #18 located on the left side of the machine.)

> **CAUTION**: Too much nitrogen can cause the mask to bow.

c. The shutter opens, exposure takes place for the length of time selected on the exposure timer, and the shutter closes, completing the exposure.

d. The nitrogen pressure under the substrate is removed.

e. Vacuum is reapplied under the substrate.

2.4.2.2 Soft Contact

If the ST and SOFT CONTACT buttons are illuminated, then exposures will be performed with only mechanical pressure pressing the substrate against the mask. During exposure, the vacuum securing the substrate to the exposure chuck remains, and no nitrogen is applied.

2.4.2.3 Proximity Mode (Optional)

If the aligner is equipped with a button marked PROXIMITY (which is located on the front panel), exposures may be made with a small gap between the mask and the substrate. This proximity gap is determined by the position of the separation lever and may be adjusted to a maximum separation distance of 50 microns, depending on the setting of the separation lever range. (A separation gap of up to 150 microns can be achieved by ordering an optional lead screw when configuring the machine.)

When the PROXIMITY button is pressed, it defeats the interlock which normally prevents exposure unless the separation lever is in the contact position. The vacuum under the substrate remains on during exposure, which takes place in normal fashion.

> Note: Even when using the proximity exposure mode, two contacts will be made between mask and substrate: (1) prior to alignment in order to perform mask to substrate parallelity compensation, and (2) after exposure when the parallelity compensation head brakes are switched off and the wedge head returns to its normal position.

2.5 Adjustment Procedures

Certain features of the SUSS MJB 3 are user adjustable and are described in this section.

2.5.1 Vacuum Chamber Adjustment Procedure

The vacuum chamber is adjustable in all MJB 3 models except the MJB 3 Standard which has no vacuum chamber. Under certain circumstances, the operator may wish to expose substrates in vacuum contact mode with less than full vacuum in the vacuum chamber. If this is the case, a vacuum gauge and adjustment throttle are located at the left end of the control panel.

To set the vacuum level, bring a substrate to the contact position in vacuum chamber mode as outlined in Section 2.3.2, and press the VACUUM CHAMBER button. Use the throttle and vacuum gauge reading to adjust the vacuum as desired. Opening the throttle introduces a small leak into the vacuum chamber which offsets the vacuum from the vacuum source. Turn the throttle counterclockwise to decrease the vacuum, or clockwise to increase the vacuum.

> Note: This adjustment does not affect the amount of vacuum under the substrate during alignment.

The vacuum gauge can also be used to detect vacuum leaks in the vacuum chamber due to damaged chucks, vacuum gaskets, etc.

2.5.2 Airing Feature Adjustment Procedure

When using a chuck equipped with a vacuum gasket, a partial vacuum may unintentionally develop during alignment between substrate and mask due to an imperfect seal between the substrate and the chuck. This can occur if the backside of the substrate is unusually rough or scratched, or if scratches are present in the chuck surface. This partial vacuum can cause the substrate and mask to stick together and make alignment difficult or impossible. To overcome this problem, a small flow of nitrogen is introduced into the vacuum chamber whenever the substrate is separated from the mask. This nitrogen flow is controlled by throttle #12 located towards the back left panel of the machine (Figure 2-10).

The throttle can be adjusted as follows:

a. Bring a substrate to the separation (alignment) position as outlined in Sections 2.3.1 through 2.3.3.

b. Turn throttle #12 counterclockwise until the substrate and mask do not stick together in separation position and the substrate moves freely in relation to the mask when the alignment micrometers are adjusted.

c. Using the separation lever, move the substrate into contact with the mask and back into separation again. Observe the substrate and mask through the microscope throughout this operation.

d. If the substrate shifts in relation to the mask during this procedure, turn the throttle clockwise until there is no further shifting.

2.5.3 Setting the Variable Thickness Adjustment

The MJB 3 is equipped with a device to process substrates of various thicknesses. The device can also be used to vary the contact pressure on a given wafer.

When the equipment is installed, a reference mask and wafer are used to set the contact pressure between the mask and wafer. This setting can be changed by using the thickness adjustment knob located on the front of the stage towards the bottom of the machine.

One revolution or turn of the thickness adjustment knob corresponds to a 150 micron variation of substrate thicknesses or contact pressure. Rotate the knob counterclockwise to increase the contact pressure (or subtract wafer thickness), or clockwise to decrease contact pressure (or add wafer thickness).

EXAMPLES: Assume that in each of the three cases a reference mask of 60 mil (1500 microns) thickness and a reference wafer of 20 mil (500 microns) thickness is used to set up the machine at installation. Also assume that a contact pressure of 500 microns is set which corresponds to a setting of 5.0 on the thickness adjustment knob.

Example #1:

Task - process 14 mil (350 micron) thick wafers.

Procedure - rotate the thickness adjustment knob counterclockwise to a setting of ~~6.0~~ (500 microns - 350 microns = 150 microns = 1 revolution). 4

Example #2:

Task - decrease contact pressure from 500 to 350 microns.

Procedure - rotate the thickness adjustment knob clockwise to a setting of ~~4.0~~ (150 microns = 1 revolution). 6.0

Example #3:

Task - use a 63 mil thick mask.

Procedure - rotate the thickness adjustment knob clockwise to a setting of ~~4.5~~ (63 mil - 60 mil = 3 mil = 75 microns = 0.5 revolution). 5.5

dial numbers move in opposite direction
- Mike Hill 9/12/00

3 WARNINGS AND SAFETY HAZARDS

IMPORTANT: This section contains information that the operator must know and understand to minimize the risk of injuries.

KARL SUSS equipment is designed to protect the user against all possible hazards. After review by qualified safety personnel, the user should generate a specific safety procedure with regard to the particular application of the equipment and local codes and make certain that operators are familiar with the procedures. The safety procedures should be posted in a highly conspicuous location so that all operators of the equipment cannot fail to read them.

3.1 Electrical Precautions

When the covers are removed from the mask aligner, dangerous voltages may be exposed. When all of the covers are in place, there is no danger from these voltages.

Service of the electrical system should be performed only by qualified personnel, so it should never be necessary for the operator to have to open the cover of the electrical portion of the mask aligner. If any problems occur with the power supply, turn the machine off and notify maintenance immediately.

CAUTION: Never open the housing while the power line is connected.

3.2 High Pressure Lamps

The light source for the concentrated ultraviolet illumination required to expose the wafer is a high pressure lamp. Special precautions must be taken when working with these lamps.

3.2.1 Electrical Hazards

The voltage and current required to run a high pressure lamp constitute a lethal combination. Starting ignition voltages are 30 KV and open circuit potentials range up to 180 VDC at currents between 5 and 50 amps.

When performing any maintenance on the exposure lamp power supply, lamp housing, or the lamp itself, ensure that the power line to the power supply is disconnected.

3.2.2 Lamp Explosion

These exposure lamps operate at extremely high pressure (50 - 70 atm). Explosion is therefore a possibility if they are handled or operated wrongly. The lamps may fail as a result of improper cooling, improper setting of the power supply, usage outside the manufacturer's guidelines, etc. Additionally, some high pressure lamps, even when cold, are still above atmospheric pressure and should be handled with protective face shields and gloves.

> **NOTE:** Careful handling of the lamp and proper operation of the equipment will substantially reduce the possibility of lamp explosions.

The lamphouse is designed to minimize damage to the interior of the equipment and prevent possible injury to the operator should a lamp explosion occur. All assemblies and protective covers must be in place during operation of the machine.

Some of these lamps contain hazardous elements like mercury. If a lamp should break, avoid touching the fragments and/or breathing the vapor.

3.2.3 Exhaust Requirements

High pressure lamps produce ozone due to the interaction of the radiation emitted below a wavelength of 250 nm with oxygen. Ozone attacks the mucous membranes of the respiratory system, producing symptoms similar to pneumonia. The effects are cumulative. The smaller wattage lamps, cadmium-xenon to 200 watts and mercury to 500 watts, should be operated in a well ventilated area only. Larger wattage lamps, such as 350 watt Cd-Xe, 500 watt Hg-Xe, and 1000 watt Hg must be exhausted from the room.

3.2.4 Eye and Skin Safety

The ultraviolet light produced by these lamps can cause erythema of the skin (similar to sunburn) and conjunctivitis. In addition, the large infrared output can cause retinal burns resulting in blindness.

Every SUSS mask aligner is equipped with light guards, and the high pressure lamp and exposure path are enclosed. The mask aligner should not be operated unless all of these protective covers and devices are in place.

3.3 Broken Wafers

Since fragments of broken wafers and substrates can be very sharp, there is a risk of injury to the operator or to maintenance personnel when trying to remove them from the machine. Extra care should be taken and proper tools, i.e. tweezers, should be used to minimize this risk.

3.4 Moving Parts

The operator should be careful to keep loose clothing or long hair from getting caught in the machine.

4 QUALITY STANDARDS

This chapter briefly describes some of the quality standards which we recommend you follow to help you obtain the best possible results from your SUSS equipment. KARL SUSS manufactures precision instruments that cannot be expected to function properly unless they are correctly adjusted and maintained, and precautions are taken to ensure a clean environment.

We assume that you have a comprehensive quality control program which has been developed to suit your particular application. Our comments are intended only as a reminder that quality standards are an essential part of good business practices.

4.1 Environment

A mask aligner is intended for use in a well managed, professionally supervised clean room.

Mask dimensions are usually on the order of several microns, and frequently fall into the submicron range. At this level of precision, almost everything in a normal production environment would be judged too "dirty" to make semiconductor devices.

The cleanliness requirement is particularly stringent in the photomasking area. Not only are all of the critical dimensions produced here, but the frequent chemical operations present many opportunities for accidental contamination. Any type of contamination will affect fabrication yield and circuit reliability.

The exposure quality obtained from a mask aligner is a function of many variables in addition to clean room conditions. The quality of the mask used, wafer flatness, specifications and quality of the photoresist, and the condition of the resist spinner all play important roles.
To ensure the best possible results, the user must take appropriate steps to provide a clean environment and maintain consistent and effective quality standards for all aspects of the photomasking process.

4.2 Machine Checks and Adjustments

A mask aligner should be checked on a regular basis to ensure that the machine is still adjusted to optimum performance conditions.

4.2.1 Light Intensity

The light intensity measured at the wafer plane compared with the power input to the lamp gives an indication of any existing or pending failure of the exposure lamp. Towards the end of the lamp's life, the bulb begins to darken. This is an indication of an increased possibility of a lamp explosion.

You should record the power input to the exposure lamp on a daily basis. Do not exceed the limit specified by the manufacturer of the exposure lamp.

4.2.2 Light Uniformity

As part of your standard routine, you should measure the light intensity at different points of the wafer plane, for example at the 12, 3, 6, and 9 o'clock positions, and at the center.

By comparing these measurements, you can calculate and monitor the light uniformity. Please refer to the appropriate sections of Chapter 5 for details on intensity and uniformity adjustments.

4.2.3 Chucks and Maskholders

Chucks and maskholders are manufactured to very fine tolerances. Your normal routine as part of your attention to quality standards should include inspection of chucks and maskholders for cleanliness, mechanical integrity, and evidence of residues of any kind, including photoresist. The use of chucks or maskholders that have scratches or show signs of abuse will result in poor equipment performance.

A visual inspection is usually all that is required.

5 MAINTENANCE

Your SUSS Mask Aligner is carefully designed and solidly built to exacting standards in order to provide many years of reliable performance. In fact, there are SUSS aligners still in daily use after more than fifteen years of service. To ensure optimum performance and a long operating life, proper routine maintenance and care are absolutely essential.

This chapter will acquaint you with the general maintenance requirements and will outline the procedures for periodic maintenance and calibration such as lamp replacement, intensity and uniformity checks, and power supply calibration.

5.1 General Maintenance

The short time which you spend to accomplish these checks and tests will greatly improve the overall performance of the machine. Be alert at all times to any unusual machine noises, behavior, or changes in operation or results which may be symptomatic of problems which could damage the machine if left uncorrected.

It is most important to conduct a thorough visual check of the machine on a daily basis. Key areas include chucks, maskholders, and the alignment stage. These parts should be free of dust and residue, especially photoresist. Also inspect for scratches and other signs of wear since the use of scratched or damaged chucks and maskholders will result in poor equipment performance.

5.2 Replacement and Adjustment of Exposure Lamp: Standard and HP Models Only

The procedure for the replacement and adjustment of the exposure lamp for the MJB 3 Standard and the MJB 3 HP models is described below. Please refer to Section 5.3 for instructions regarding the MJB 3 UV400, UV300, UV250, and UV200 exposure optics.

CAUTION: Under no circumstances should you touch the quartz bulb of the exposure lamp with your fingers. Immediately clean inadvertently touched spots with alcohol and a soft lint free cloth.

5.2.1 Lamp Replacement: Standard and HP Models Only

- Switch off the exposure lamp power supply and disconnect the main power cord: switch off the mask aligner.
- Do not attempt to open the lamphouse until the lamp has been switched off for al least 20 minutes. Then unscrew the screw securing the lamphouse and carefully swing it open on its hinges. (Refer to Figure 5–1.)

CAUTION: Never touch the quartz bulb with your fingers! Handle the lamp only by its metal ends.

- Remove the knurled nut from the negative (non-engraved) terminal of the lamp and remove the lead wire.
- Take the new lamp from its box and remove the knurled nuts.
- Install the positive (engraved) terminal of the new lamp into the lamp socket by grasping the lamp at the negative (non-engraved) terminal and carefully screwing it in.
- Carefully secure the negative lead wire to the terminal using a new knurled nut.
- Check the exposure shutter for free movement. Switch on the mask aligner and turn the CONTACT lever to the contact position. Press the EXPOSURE button and check the shutter for correct operation. Return the CONTACT lever to the separation position and switch off the mask aligner.
- Close the lamphouse and secure it with the screw.
- Go to Section 5.2.2 and perform intensity and uniformity adjustments and measurements.

5.2.2 Intensity and Uniformity Adjustments and Measurements: Standard and HP Models Only With 200W Lamphouse

The exposure lamp must always be adjusted for intensity and uniformity after it has been changed in order to ensure uniform exposure across the entire exposure area. In addition, the intensity and uniformity should be checked whenever it is suspected that wafers are not being evenly exposed.

5.2.2.1 Adjusting the Exposure Lamp: Standard and HP Models Only

> **CAUTION:** The high intensity produced by exposure lamps can cause eye damage. Personnel working with this equipment should wear eye protection to block ultraviolet and infrared radiation. Karl Suss will not be responsible for injuries arising from incorrect or unprotected work with these systems.

All exposure lamp adjustments are done with the exposure lamp power supply in idle mode. To perform the adjustments, you will need an intensity meter and the appropriate optical probe (365 nm or 405 nm). Follow these instructions:

- Ensure that the mask aligner power button is in the OFF position.
- Switch on the nitrogen and compressed air sources (manometer box) and adjust the regulators to the proper settings.
- Switch on the exposure lamp power supply and ignite the exposure lamp by pressing the LAMP START button. Be certain that the power supply is set for idle mode. Allow the lamp to stabilize for 10 - 15 minutes.
- Switch ON the mask aligner.
- Turn the CONTACT lever to the contact position.
- Place a piece of black paper (approx. 100 mm x 100 mm, or 4" x 4") on the parallelity compensation plate to avoid scratching its surface. Place the optical probe on the paper.
- Set a long exposure time on the exposure timer and press the EXPOSE button.

The black knobs on the rear of the lamphouse are used to adjust the position of the exposure lamp, spherical mirror, and condenser lenses. Refer to Figures 5-2 and 5-3.

- Turn knob #1 clockwise to adjust the condenser lens assembly toward the lamp until the lamp electrode and its reflected image become visible on the paper.

- Move the electrode image to left or right center of the field by vertical adjustment (knob #2) and rotation (knob #3) of the lamp.

- Move the reflected electrode image to the other side of the center of the field using knob #4 and knob #5.

- Loosen the knurled screw (#6), and using knob #7, adjust the mirror in or out until the electrode image and its reflected image are of equal size. Clamp, using screw #6.

- Adjust the position of the electrode image and its reflected image until they are just touching in the center of the field, using knobs #2, 3, 4, and 5.

- Using knob #1, adjust the condenser lens assembly away from the lamp until the exposure beam uniformly illuminates the exposure area.

  NOTE: As the condenser lens assembly is moved away from the lamp, intensity is reduced. Within a range where acceptable uniformity is obtained, this adjustment may be used to vary intensity.

5.2.2.2 Intensity and Uniformity Measurements: Standard and HP Models Only

If the intensity and uniformity adjustments in Section 5.2.2.1 were performed properly, the light intensity will be uniform at this point.

In order to ensure that exposures will be satisfactory for uniform production results, it is important that the light intensity be within ± 10% tolerance.

With the optical probe, measure the light intensity at different point of the wafer plane, for example at the 12, 3, 6, and 9 o'clock positions, at the center, and at several points in between. Using the high and low readings (H and L), determine that the uniformity, as calculated by the formula:

$$\text{Uniformity} = [(H-L)/(H+L)] \times 100\%$$

is less than 10%.

Once the uniformity is within the prescribed tolerance, calibrate the power supply.

5.2.3 Power Supply Calibration: Standard and HP Models Only

Once the new exposure lamp has been installed and adjusted for intensity and uniformity, the exposure lamp power supply must be recalibrated, following the procedures outlined in the Operator's Reference Manual for the SUSS Constant Intensity Controller.

First, it is necessary to calibrate the supply to the measurement obtained on the power meter with the optical probe in the center of the exposure field. Next the power supply is adjusted to the desired intensity output. Once calibrated, the reading on the power meter should track the reading on the power supply.

The power supply idle wattage is set at the factory. The lamp should be replaced when it reaches the maximum allowable power setting to avoid the possibility of a lamp explosion.

Your mask aligner is supplied with a SUSS Model CIC 500 or Model CIC 1000 Constant Intensity Controller (power supply). You will find the manual for the power supply included with this manual.

5.3 Replacement and Adjustment of Exposure Lamp in the 350W Lamphouse: Includes UV400, UV300, UV250, and UV200 Exposure Optics Only

The procedure for the replacement and adjustment of the exposure lamp for the SUSS MJB 3 UV400, UV300, UV250, and UV200 exposure optics is described below. Refer to Section 5.2 for instructions regarding the MJB 3 Standard and HP models.

> **CAUTION:** Under no circumstances should you touch the quartz bulb of the exposure lamp with your fingers. Immediately clean inadvertently touched spots with alcohol and a soft lint free cloth.

If there are any questions, please feel free to contact KARL SUSS Customer Service, or your local SUSS service representative.

5.3.1 Lamp Replacement: UV400, UV300, UV250, and UV200 Exposure Optics Only

- Switch off the exposure lamp power supply and disconnect the main power cord.

- Switch off the mask aligner.

- Do not attempt to open the lamphouse until the lamp has been switched off for at least 20 minutes. Then unscrew the screw securing the lamphouse and carefully swing it open on its hinges. (Refer to Figure 5–4.)

- Examine the cold light mirror and clean it if necessary. To clean it properly, it must be removed from the lamphouse. HANDLE THE MIRROR WITH CARE! Clean under hot running water using a soft sponge and liquid soap. Rinse thoroughly, carefully blow off the mirror with nitrogen, and reinstall it in the lamphouse.

  The orientation of cold light mirrors 1 and 2 on the holder is not critical, since both sides of the mirror are coated. However, cold light mirrors 7, 8, and 11 are coated only on one side. This side is indicated by an arrow on one edge on the mirror. The mirror must be mounted on the holder so that the coated side faces the lamp.

> **CAUTION:** Never touch the quartz bulb with your fingers! Handle the lamp only by its metal ends.

- Remove the nut from the free end of the lamp and remove the lead wire. Keep the nut!

- Carefully unscrew the lamp from the socket. Should an adapter come out with the lamp, remove it and install it on the corresponding terminal of the new lamp.

- Take the new lamp from its box and remove the knurled nuts which are no longer needed.

  NOTE: The knurled nuts which come with replacement lamps must NOT be used!

- Install the new lamp, and adapter if necessary, in the lamphouse socket.

> **CAUTION**: The polarity of the Hg lamps is opposite that of the Cd/Xe and Hg/Xe lamps.

(1) When installing a Hg lamp, insert the negative terminal through the ellipsoid mirror and carefully screw it into the lamp socket.

(2) When installing a Cd/Xe or Hg/Xe lamp, insert the positive terminal through the ellipsoid mirror and carefully screw it into the lamp socket.

- Carefully secure the lead wire to the free end of the lamp with the hexagon nut. If the lead wire appears to be damaged or extremely blackened, replace it.
- Check the position of the cooling tube so that it is directed towards the metal base of the free end of the lamp.
- Continue with Section 5.3.2.

5.3.2 Lamphouse Reassembly and Pneumatic Adjustments: UV400, UV300, UV250, and UV200 Exposure Optics Only

- Close the lamphouse and secure it with its screw.
- Adjust the nitrogen flow for cooling of the lamp base using throttle #17 which is located on the rear of the machine. Close the throttle by turning it clockwise, then open counter clockwise about 1/2 to 1 turn.

> **CAUTION:** Throttle numbers may differ on some machines. Please verify the numbers with your pneumatic plan if in doubt.

- Adjust the air flow for cooling of the heat sink using throttle #16. The throttle should be open about 5 turns for an air input pressure of approximately 4 bar.
- Continue with Section 5.3.3 and perform the intensity and uniformity adjustments.

5.3.3 Intensity and Uniformity Adjustments and Measurements: UV400, UV300, UV250, and UV200 Exposure Optics Only

The exposure lamp must always be adjusted for intensity and uniformity after it has been changed in order to ensure uniform exposure across the entire exposure area. In addition, the intensity and uniformity should be checked whenever it is suspected that wafers are not being evenly exposed.

5.3.3.1 Adjusting the Exposure Lamp: UV400, UV300, UV250, and UV200 Exposure Optics Only

> **CAUTION**: The high intensity produced by exposure lamps can cause eye damage. Personnel working with this equipment should wear eye protection to block ultraviolet and infrared radiation. Karl Suss will not be responsible for injuries arising from incorrect or unprotected work with these systems.

All exposure lamp adjustments are done with the exposure lamp power supply in idle mode. To perform the adjustments you will need an intensity meter and the appropriate optical probe (405 nm, 365 nm, 320 nm, 240 nm, or 220 nm). Follow these instructions:

- Switch on the nitrogen and compressed air sources which provide cooling for the lamphouse. Adjust the regulators to the proper settings.
- Ensure that the mask aligner is in the OFF position.
- Switch on the exposure lamp power supply and ignite the exposure lamp by pressing the LAMP START button. Be certain the power supply is set for idle mode. Allow the lamp to stabilize for 10 – 15 minutes.
- Switch on Mask Aligner.
- Turn the CONTACT lever to the contact position.
- Place a piece of black paper (approx. 100 mm x 100 mm, or 4" x 4") on the parallelity compensation plate to avoid scratching its surface. Place the optical probe on the paper.
- Set a long exposure time on the exposure timer and press the EXPOSURE button.

The three knobs located on the lamphouse are used to adjust the position of the exposure lamp in the ellipsoidal mirror. The knob marked "Z" shifts the lamp vertically, and thus primarily controls intensity. The knob marked "Y" shifts the lamp in the Y direction, and the knob marked "X" shifts the lamp in the X direction. The primary purpose of the knobs is to adjust the uniformity of illumination.

- Maximize the reading on the power meter by first shifting the lamp vertically using the Z knob. Then do the same with the Y and X knobs.
- Alternately placing the probe at the front and rear edges of the illuminated area, use the Y knob to shift the lamp in the Y direction until the meter gives the same reading at both locations.

- Alternately placing the probe at the left and right hand edges of the illuminated area, use the X knob to shift the lamp in the X direction until the meter gives the same reading at both locations.

- Re-check the vertical adjustment (Z knob).

> **CAUTION**: The Z knob on the lamphouse must **only** be used to maximize the intensity of the exposure lamp. If you wish to adjust the intensity for process purposes, either adjust the power supply output or use proper filters. Using the Z knob to decrease the intensity will result in a build up of excess heat in the lamphouse which could lead to a lamp explosion.

5.3.3.2 Intensity and Uniformity Measurements: UV400, UV300, UV250, UV200 Exposure Optics Only

If the intensity and uniformity adjustments in Section 5.3.3.1 were performed properly, the light intensity will be uniform at this point.

In order to ensure that exposures will be satisfactory for uniform production results, it is important that the light intensity be within a ±5% tolerance.

With the optical probe, measure the light intensity at different points of the wafer plane, for example at the 12 3, 6, and 9 o'clock positions, at the center, and at several points in between. Using the high and low readings (H and L), determine that the uniformity, as calculated by the formula:

$$\text{Uniformity} = [(H-L)/(H+L)] \times 100\%$$

is less than ± 5%.

Once the uniformity is within the prescribed tolerance, calibrate the power supply.

5.3.4 Power Supply Calibration: UV400, UV300, UV250, and UV200 Exposure Optics Only

Once the new exposure lamp has been installed and adjusted for intensity and uniformity, the exposure lamp power supply must be recalibrated, following the procedures outlined in the Operator's Reference Manual for the SUSS Constant Intensity Controller.

First, it is necessary to calibrate the supply to the measurement obtained on the power meter with the optical probe in the center of the exposure field. Next, the power supply is adjusted to the desired intensity output. Once calibrated, the reading on the power meter should track the reading on the power supply.

The power supply idle wattage is set at the factory. The lamp should be replaced when it reaches the maximum allowable power setting to avoid the possibility of a lamp explosion.

Your mask aligner is supplied with a SUSS Model CIC 500 or Model CIC 1000 Constant Intensity Controller (power supply). You will find the manual for the power supply included with thie manual.

5.4 Exposure Optical System: UV400, UV300, UV250, and UV200 Exposure Optics

The UV400, UV300, UV250, and UV200 exposure optics are of similar design. They consist of an exposure lamp, ellipsoidal mirror, cold light mirror, fly's eye lens, condenser lens, diffraction reducing lens plate, turning mirror and front lens (refer to Figure 5-5).

A detailed description of the optical system is found in Section 5.4.1. Section 5.4.2 outlines the components which differ from one wavelength range to another, while Sections 5.4.3 and 5.4.4 detail the procedures for changing wavelength ranges.

5.4.1 Optical System Components

a. **Exposure Lamp** - In the case of UV400 and UV300, the exposure lamp is a 350W super pressure mercury short-arc lamp. The spectral lines emitted by the lamp which are of interest here are those at 436 nm, 405 nm, 365 nm, 335 nm, and 313 nm.

   In the case of UV250, the exposure lamp is a 500W Hg/Xe short-arc lamp which emits spectral lines in the 230-260 nm wavelength region, in addition to other lines at longer wavelengths.

   In the case of UV200, the exposure lamp is a 350W super pressure Cd/Xe short-arc lamp which emits spectral lines in the 210-230 nm region, in addition to other lines at longer wavelengths.

b. **Ellipsoidal Mirror** - The exposure lamp is mounted in an ellipsoidal collecting mirror, at one focus of the ellipsoid. This mirror (which is the same for all wavelength ranges) collects the radiation emitted by the lamp and focuses it at the second focus of the mirror.

c. **Cold Light Mirror** - The cold light mirror transmits the unwanted longer wavelength radiation to the heat sink located at the second focus of the ellipsoidal mirror under the cold light mirror, and reflects the shorter wavelength radiation (cold light) to the fly's eye lens. This mirror, unlike the ellipsoidal mirror, is specific to each wavelength range.

d. **Fly's Eye Lens** - The fly's eye lens disperses the light uniformly and directs it to the condenser lenses. The fly's eye lens is made of Herasil for the UV400 and UV300 and Suprasil (synthetic quartz) for the UV250 and UV200.

e. **Condenser Lens** - The condenser lens collimates the exposure light. The position of the condenser lens in the mirrorhouse tube affects intensity and uniformity. A scale is mounted on the right side of the mirrorhouse tube. The recommended position of the condenser lens is centered at 40 mm from the lamphouse, but it may be adjusted if necessary to obtain better uniformity. Like the fly's eye lens, the condenser lens is made of Herasil (for UV400 and UV300) and Suprasil or synthetic quartz (for UV250 and UV200).

f. **Filter Holder** - The filter holder is located between the condenser lens and the diffraction reducing lens plate. In the UV400 system, it may be used to mount filters of various types for work with negative resist or to reduce intensity (neutral density filters). In the UV300 system, a 365 nm interference filter is mounted in the holder. The position of the filter holder is not critical.

g. **Lens Plate** - The lens plate reduces diffraction effects in the printed image. The position of the lens plate, like that of the condenser lens, affects intensity and uniformity. The recommended position of the lens plate (which is adjusted by tightening the set screw) is approximately 85 mm on the reference scale. The lens plate is specific to each wavelength range.

h. **Turning Mirror** - The turning mirror, which is the same for all wavelength ranges, changes the direction of the exposure beam from horizontal to vertical. It is important that the metallized side of the mirror face the beam.

I. **Front Lens** - The front lens, which is specific for each wavelength range, provides final collimation and uniformity of the exposure beam.

5.4.2 Optical Components by Model

As already mentioned, the fly's eye lens and the condenser lens are both fabricated of Herasil for UV400 and UV300 exposure optics, and of Suprasil for UV250 and UV200 exposure optics. However, the Suprasil components can be used for all wavelength ranges, while the Herasil components may only be used for UV400 and UV300.

5.4.2.1 UV400 Optical Components

- **Exposure Lamp:** 350W Hg with adapter.

- **Cold Light Mirror**: #1 or #7. The number of the cold light mirror is marked on one corner. Cold light mirror #1 is specific to UV400, while cold light mirror #7 may be used for UV400 and UV300.

- **Lens Plate**: Two lens plates with 12 lenses each arranged in a triangle configuration, fabricated of Herasil.

- **Front Lens**: Transparent.

5.4.2.2 UV300 Optical Components

- **Exposure Lamp**: 350 Hg with adapter.

- **Cold Light Mirror**: #2 or #7. The number of the cold light mirror is marked on one corner. Cold light mirror #2 is specific to UV300, while cold light mirror #7 may be used for UV400 and UV300.

- **Interference Filter**: 60 mm diameter round filter (365 nm).

- **Lens Plate**: One lens plate with 12 single lenses arranged in a triangle configuration, fabricated of Herasil.

- **Front Lens**: Black.

5.4.2.3 UV250 Optical Components

- **Exposure Lamp**: 500W Hg/Xe.

- **Cold Light Mirror**: #11. The number of the cold light mirror is marked on one corner.

- **Lens Plate**: Two lens plates with 12 lenses each arranged in a triangular configuration, fabricated of Suprasil. The Suprasil lens plate may also be used for UV400.

- **Front Lens**: Transparent, fabricated of Suprasil.

5.4.2.4 UV200 Optical Components

- **Exposure Lamp**: 350W Cd/Xe with adapter.

- **Cold Light Mirror**: #8. The number of the cold light mirror is marked on one corner.

- **Lens Plate**: Two lens plates with 12 lens each arranged in a triangle configuration, fabricated of Suprasil. The Suprasil lens plate may also be used for UV400.

- **Front Lens**: Transparent, fabricated of Suprasil.

5.4.3 Changing from One Wavelength Range to Another

The procedure for converting from one exposure wavelength range to another is the same for all optics sets. Perform the following sequence using the components for the desired wavelength range as described in Section 5.4.2.

Switch off the exposure lamp power supply and disconnect it from the main power source. Allow at least 20 minutes for the lamp to cool.

Exposure Lamp

- Loosen the lamphouse retaining screw and swing open the lamphouse on its hinges.

  NOTE: If you are converting from UV400 to UV300, or from UV300 to UV400, the exposure lamp is the same for both optics set.

- Remove the existing lamp and adapter.
- Insert the correct lamp (See Section 5.3.1).

  UV400 - 350W Hg with adapter UV250 - 500W Hg/Xe

  UV300 - 350W Hg with adapter UV200 - 350 Cd/Xe with adapter

  NOTE: Install the Hg lamp with the negative terminal through the ellipsoid mirror. Install the Hg/Xe and Cd/Xe with the positive terminal through the ellipsoid mirror.

- Remove the power supply leads terminal cover on the back of the lamphouse.
- Check that polarity of power supply leads to lamphouse are correct. Reverse if necessary. Blue cable is positive - white cable is negative.
- Replace the power supply leads terminal cover.

Cold Light Mirror

NOTE: If you are converting from UV400 to UV300, or from UV300 to UV400, and a #7 cold light mirror is currently installed, you do not have to change the cold light mirror.

- Loosen the screws holding the cold light mirror retaining clips and remove the cold light mirror.

- Place the correct cold light mirror on the mount and tighten the retaining clips (see Section 5.3.1).

  UV400 - Cold Light Mirror #7 UV250 - Cold Light Mirror #11

  UV300 - Cold Light Mirror #7 UV200 - Cold Light Mirror #8

  > **CAUTION:** Do not overtighten the retaining clips. The cold light mirror must have a small amount of free movement.

- Close the lamphouse and secure it with its screw.

Mirrorhouse

- Remove the mirrorhouse balance weights (if so equipped).

- Remove the cover on top of the mirrorhouse tube.

- Loosen the screws securing the condenser lens, filter holder, and the lens plate holder.

- Slide the components to the rear and remove the lens plate from its holder.

  NOTE: If you are converting from UV250 to UV200, or from UV200 to UV250, you do not need to change the lens plate.

- Insert the correct lens plate in the holder.

  UV400 - Two lens plates with 12 lenses each, fabricated of Herasil.

  UV300 - One lens plate with 12 single lenses, fabricated of Herasil.

  UV250 - Two lens plates with 12 lenses each, fabricated of Suprasil.

  UV200 - Two lens plates with 12 lenses each, fabricated of Suprasil.

- Slide the lens plate and holder forward to 85 mm from the lamphouse.

- If converting to UV300, insert the interference filter in the holder and slide it forward against the lens plate.

  If converting to UV400, UV250, or UV200 from UV300, remove the interference filter from its holder.

- Position the condenser lens centered at 40 mm from the lamphouse.

- Tighten the screws securing the condenser lens, filter holders, and the lens plate holder.

- Replace the mirrorhouse cover.

- Replace the mirrorhouse balance weights (if so equipped).

Front Lens

- Remove the front lens by grasping the small black knob and sliding it from the mirrorhouse.

  NOTE: If you are converting from UV250 to UV200, or UV200 to UV250, you do not need to exchange the front lens.

- Insert the proper front lens into the slide.

  UV400 - Transparent

  UV300 - Black

  UV250 - Transparent, fabricated of Suprasil

  UV200 - Transparent, fabricated of Suprasil

Intensity Sensor

- If the installed intensity sensor does not have a detector for the specific wavelength range you are converting to, it will be necessary to change the sensor so that the constant intensity controller will monitor the proper wavelength.

- The sensor is a dual channel system and may contain detectors for more than one wavelength.

- The type of sensor is marked on the plug connecting it to the power supply.

  UV400 - 365 nm and 405 nm UV250 - 240 nm

  UV300 - 320 nm UV200 - 220 nm

- If a sensor is installed that does not monitor the required wavelength, please contact SUSS Customer Service.

Reconnect the power supply to the main power source.

Refer to Section 5.3.3, Intensity and Uniformity Adjustments and Measurements, and recalibrate the power supply.

5.5 Setting Contact Pressure and Separation Stroke Using the Dial Indicator Kit

To set the contact pressure and separation stroke, please refer to Figure 5-6 and proceed as follows:

1. Move the machine out over the front of the bench to provide access to the separation stroke adjustment located under the stage.

2. Remove the microscope.

3. Place a wafer of known thickness on the chuck. If using a vacuum contact chuck, first remove the vacuum gasket.

4. Place a mask of known thickness on top of the wafer.

5. Assemble the dial indicator to the arms supplied and attached it using the fork behind the small plate located at the right front of the stage (Figure 5-6).

6. Place the steel bar supplied over the center of the chuck on the maskholder rails.

7. Position the dial indicated over the center of the bar and adjust it downward until the dial indicator arm contacts the bar and scale deflection is obtained. Rotate the outer ring of the dial indicator to obtain a reference needle reading of zero.

8. Rotate the contact lever 180° counterclockwise. The wafer and mask will contact the bar and move it upward.

9. The upward movement of the bar (measured from the zero reference) is the contact pressure. The amount of contact pressure is adjusted by rotating the variable thickness adjustment knob counterclockwise to increase it and clockwise to decrease it. One revolution of the knob corresponds to a 150 micron variation in contact pressure.

10. When the desired contact pressure has been set, record the wafer thickness, mask thickness, and the reading of the variable thickness adjustment knob. These values are used as the reference when varying substrate thickness or contact pressure without the use of the dial gauge (refer to Section 2.5.3).

11. Move the separation level to its rearmost position and observe the deflection on the dial indicator. This is the separation stroke. To adjust it, refer to Figure 5-7. Loosen the locking screw and slide the arm in to increase the separation stroke, or out to decrease it. Re-tighten the locking screw.

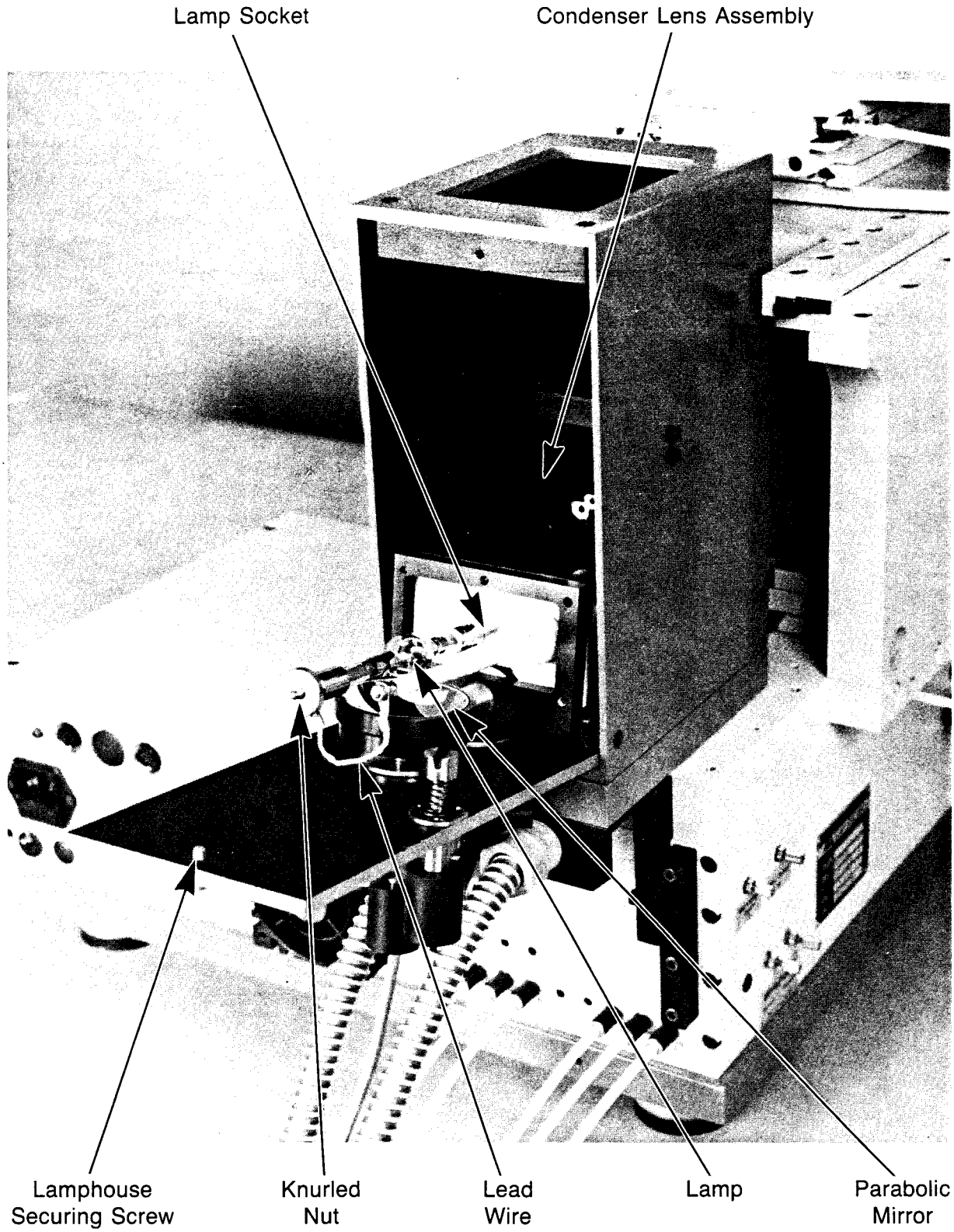

Figure 5 - 1 Lamphouse (Standard and HP/200W)

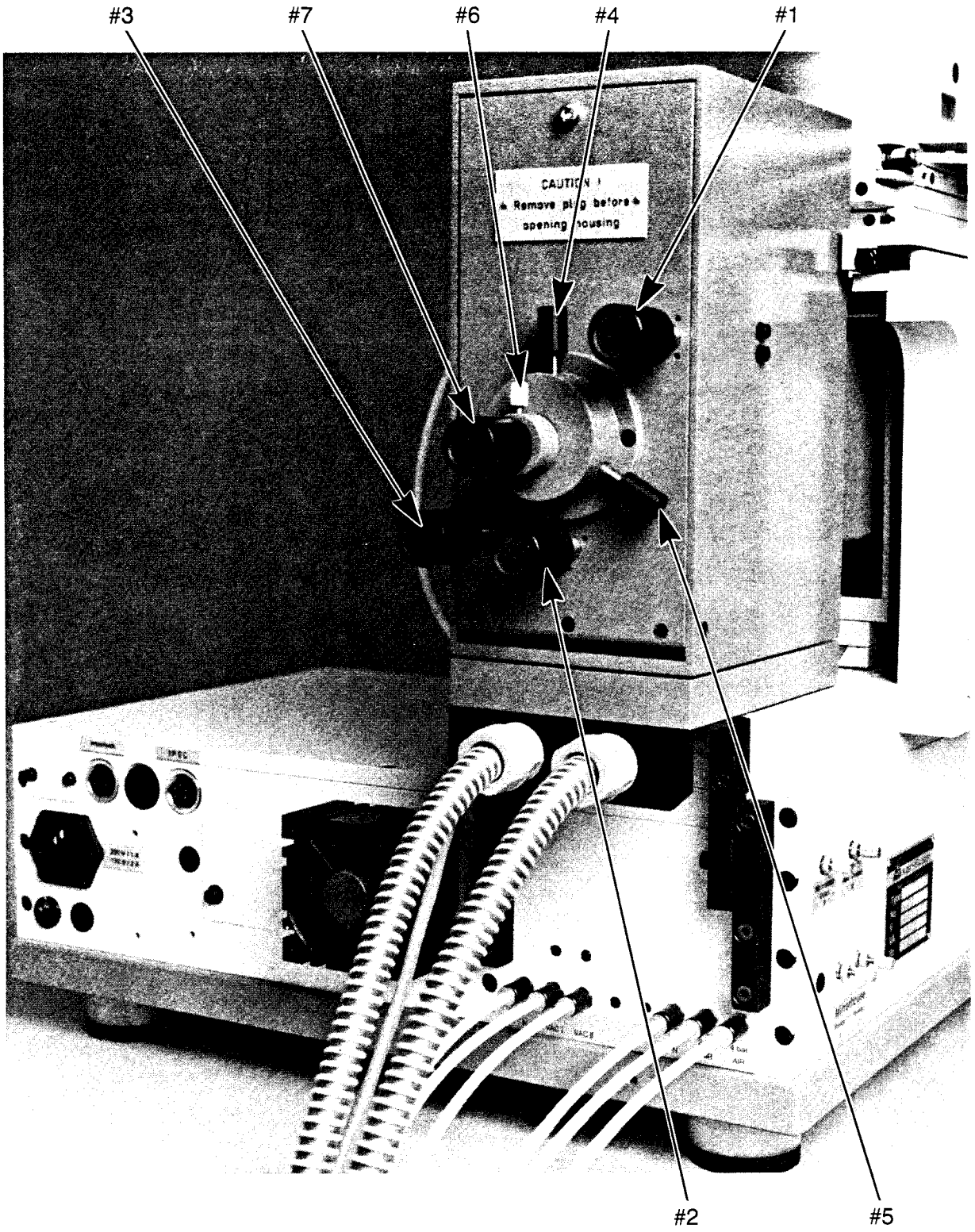

Figure 5 - 2 Lamphouse (Standard and HP/200W) Showing Adjustments

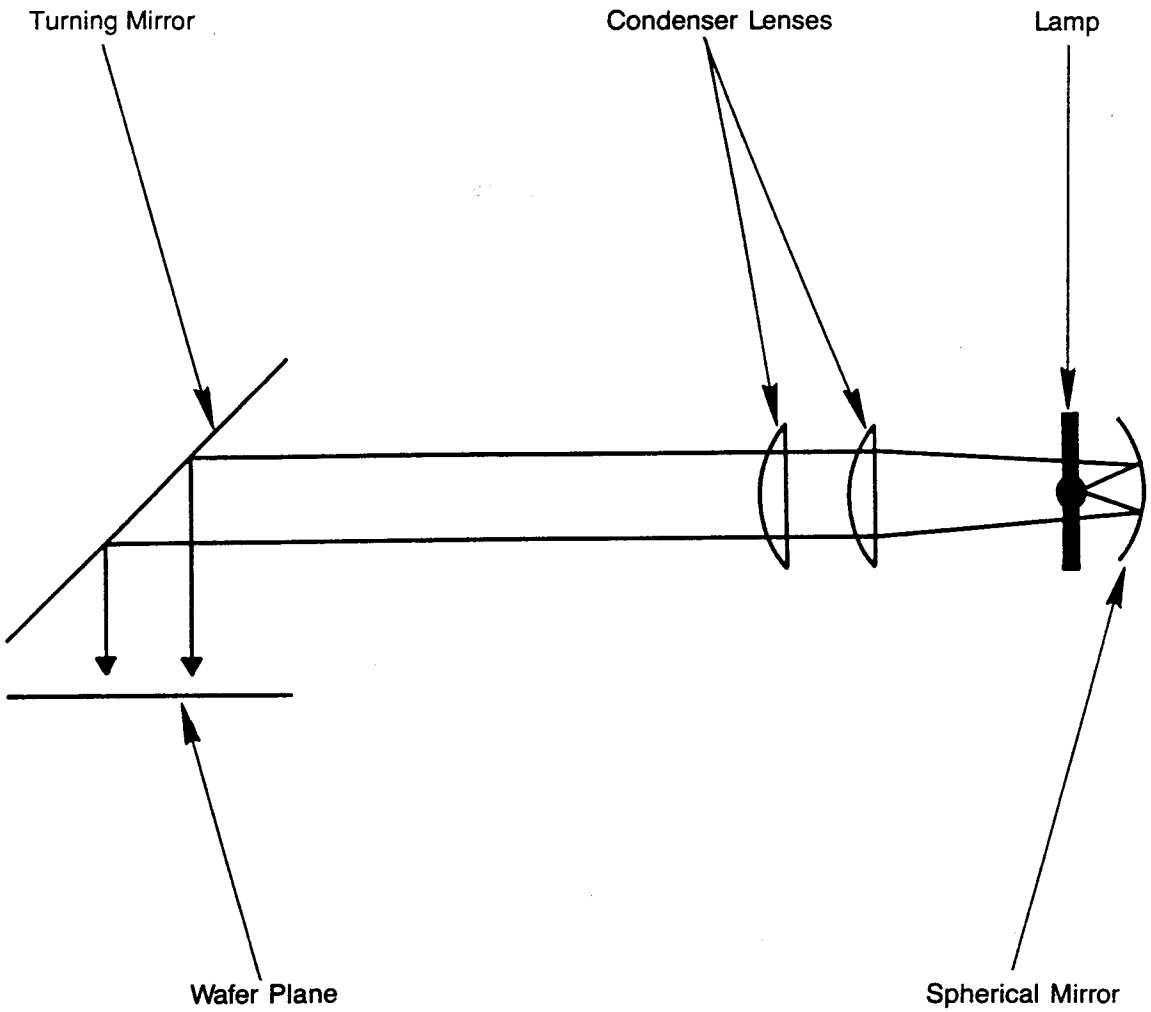

Figure 5 - 3 Exposure Optical System (Standard and HP)

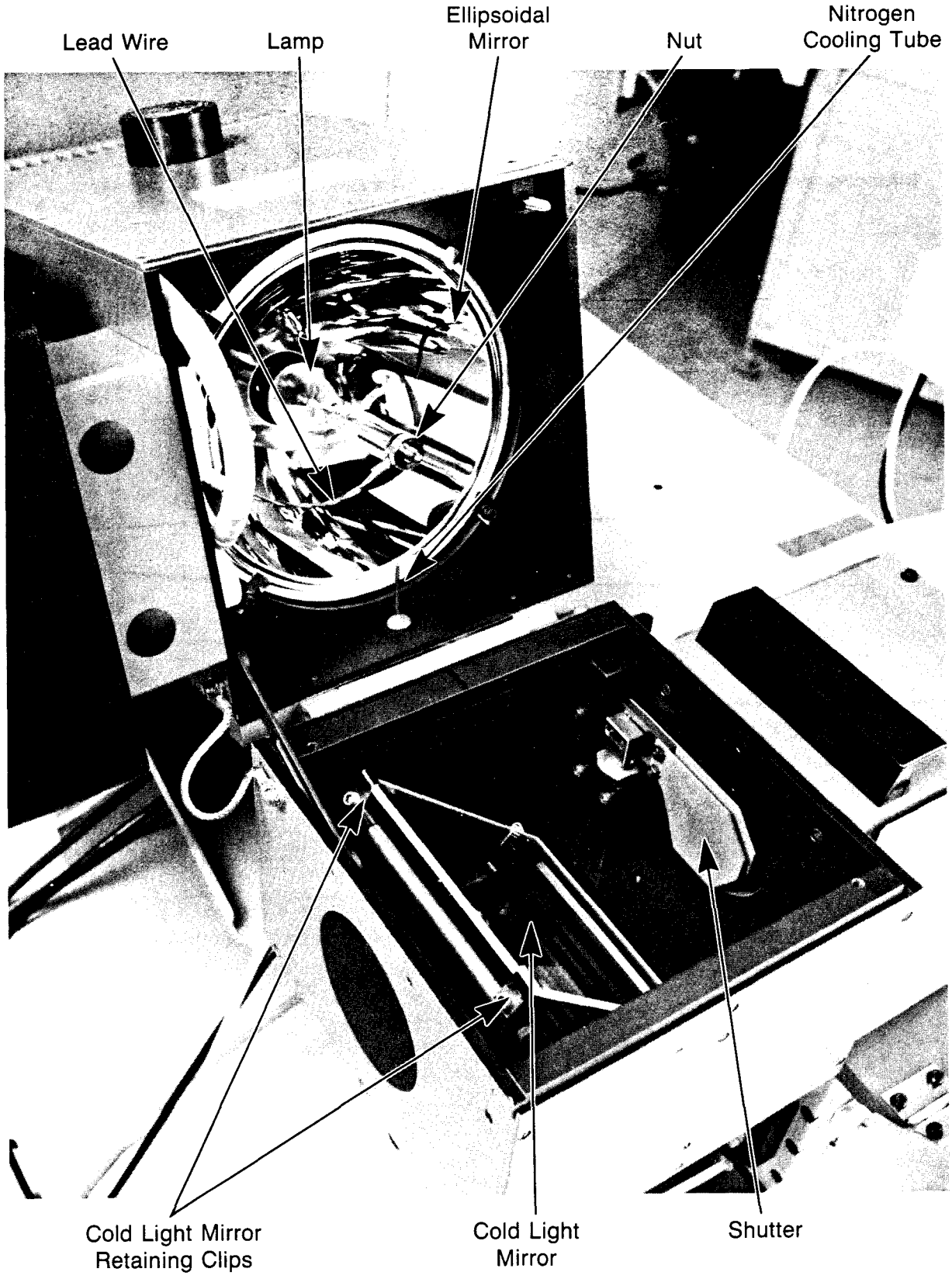

Figure 5 - 4 Lamphouse (350W)

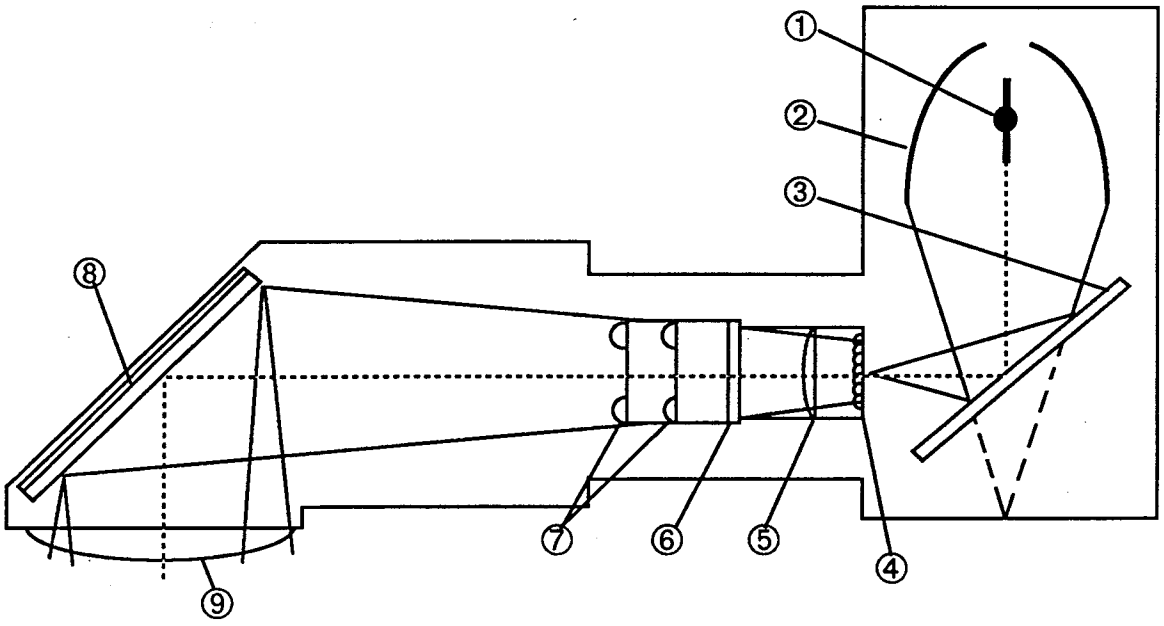

① Lamp
② Ellipsoidal Mirror
③ Coldlight Mirror
④ Fly's Eye Lens
⑤ Condenser Lens
⑥ Frame for Filters
⑦ Diffraction Reducing Lens Plates
⑧ Turning Mirror
⑨ Front Lens

Figure 5 - 5 Exposure Optical System (UV400/300/250/200)

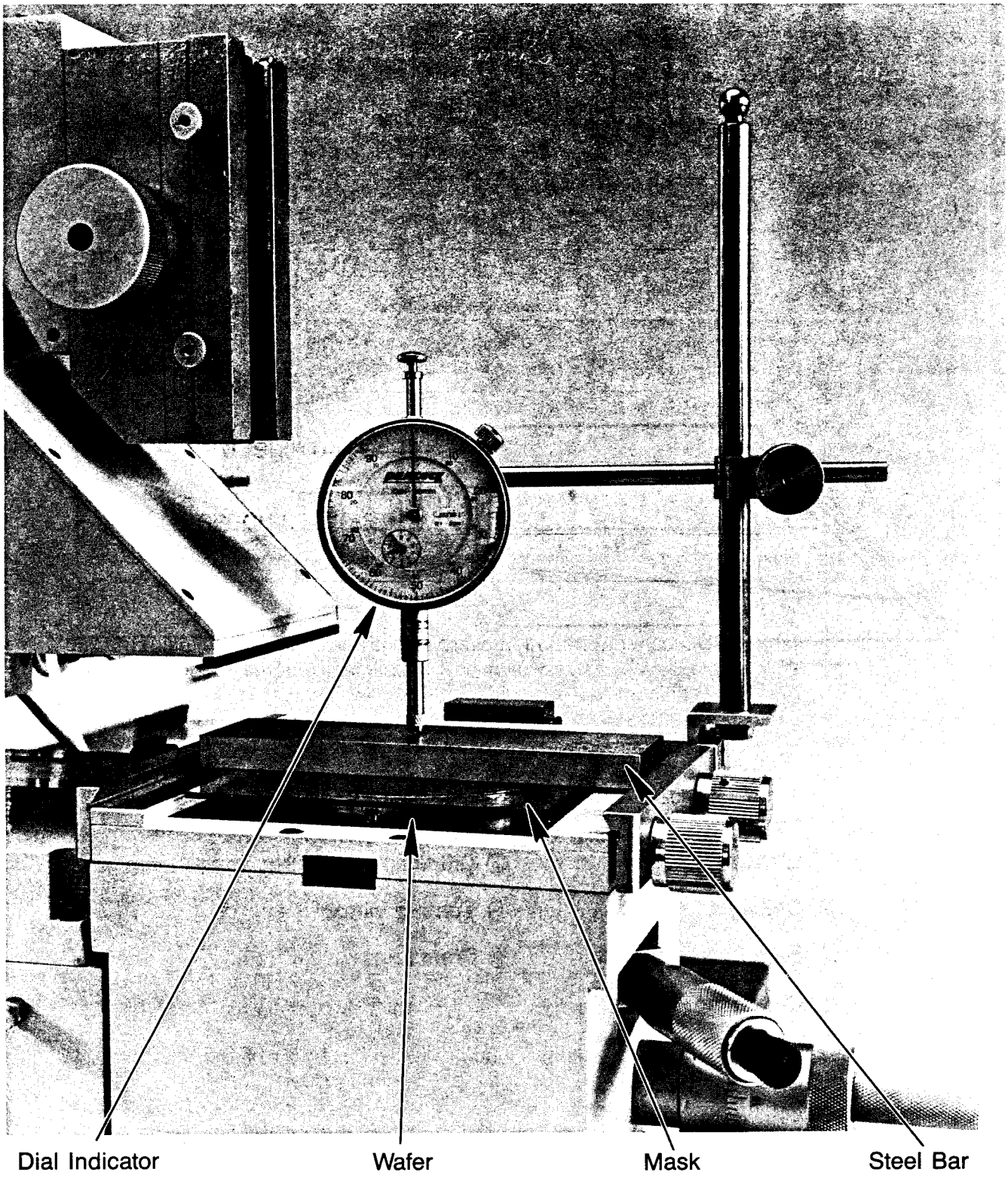

Figure 5 - 6 Dial Indicator Assembled on Machine

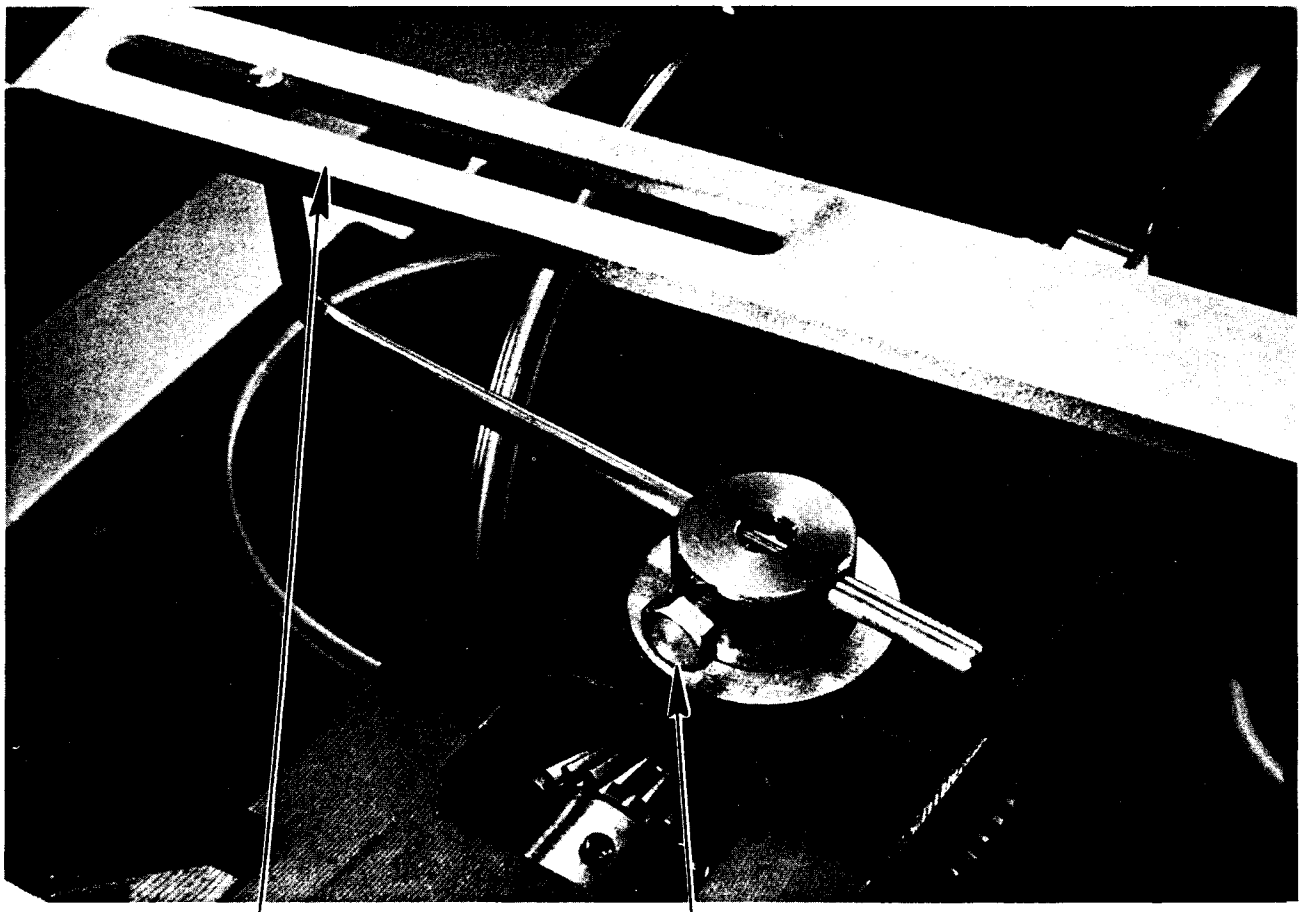

Figure 5 - 7 Separation Stroke Adjustments

6 INSTALLATION

6.1 General

A few weeks prior to shipment of your equipment, you should receive an installation package from KARL SUSS. Figure 6-1 is a checklist which should be used to ensure that installation of the equipment is smoothly accomplished. Figure 6-2 includes machine "footprints" which may be used to determine and allocate the space required.

6.2 Receiving the Shipment

KARL SUSS will give your company an estimated date of arrival before shipping the equipment to your facility. If there are any special requirements at your site concerning shipment and receipt of large, heavy containers, please get in touch with us immediately. Upon arrival of the shipment, the containers should be inspected for evidence of damage or mishandling. If any damage is apparent, notify the freight carrier and KARL SUSS at once.

6.3 Installing the Equipment

The mask aligner must be installed by a KARL SUSS field service representative. The various assemblies of the system, in their containers, may be transferred to the installation location if desired, but the containers should not be opened and unpacked until the service representative arrives. This is very important in order to avoid any questions regarding the equipment warranty.

6.4 Clearance Required for Crate

The machine and accessories are normally shipped in one crate fitted with skids to permit it to be moved with standard material handling equipment. The packed crate is approximately 940 mm (37 in) wide by 1245 mm (49 in) deep by 965 mm (38 in) high and weighs about 193 kg (425 lbs). The receiving doors should be wide enough to allow the crate to be moved inside the building for unpacking.

6.5 Environmental Requirements

The machine should be located in a vibration-free area that is also as free as possible from dust and acid fumes. The area must be maintained at a room temperature between 20°C (68°F) and 22°C (72°F) and at a relative humidity of 45 - 55% Since the equipment may be affected by static electricity from the operator, it should be installed where the floor covering does not generate a static charge.

The equipment must be installed at least 8 cm (3 in) from the wall to allow for ventilation. In addition, all utilities are connected to the back of the unit. Although the machine can usually be serviced in place, it may be necessary in some cases to move it 60 cm (24 in) from the wall for access.

6.6 Power Requirements

6.6.1 U.S. Market

The units require two grounded (3-pronged) 110V/60Hz outlets:

- one at 20 amps for the machine electronics
- one at 20 amps to power the isolation transformer which is connected to the lamp power supply.

6.2.2 International Market

The units require 220V/50Hz or 110V/60Hz AC.

- Power cord - grounded 3-wire cable; 1.5m (5 ft) for 220V.

6.7 Other Utility Requirements

Requirements for nitrogen, vacuum, and compressed air:

- Nitrogen: 30 - 45 psi or 2 - 3 bar; consumption - 17.5 scfh (0.5 m^3/h)
- Vacuum: more than 24" of Hg or less than 200 mbar absolute (less than -0.8 bar gauge); flow rate = insignificant
- Compressed air: 75 - 105 psi or 5 - 7 bar; consumption - 35 scfh (1.0 m^3/h)

Exhaust lamphouse cooling:

- Hose: 100 mm inside diameter
- No exhaust required for 200W and 350W lamp

It is important to use dry nitrogen and to eliminate any water, oil, or dust particles in the compressed air lines. All connections to a house vacuum system should be separate to avoid vacuum interference.

U.S. Market - Refer to Figure 6-1 for additional requirements.

International Market - The shipment includes hoses to connect vacuum, compressed air, and nitrogen to the machine. The customer is responsible for the connections to the back of the machine. KARL SUSS will equip each machine with the appropriate connector for 6 mm (1/4") hose.

CHECKLIST FOR MACHINE INSTALLATION

(U.S. Market)

NAME _____

COMPANY _____

MODEL _____

SERIAL # _____

EST. SHIP DATE _____

SPECIAL NOTES _____

_____

Your organization will soon be receiving this high performance SUSS Mask Aligner. In order to ensure a smooth installation, the following need to be available prior to the arrival of the service engineer who will be setting up your machine:

1. Power meter to calibrate lamp and power supply. _____

2. Provided through 1/4" OD semi-rigid hose to machine location:

   a. 75 - 105 psi of filtered, dry air _____

   b. 30 - 45 psi of 99.9% grade dry nitrogen _____

   c. 24" Hg vacuum _____

3. Two tees for 1/4" OD hose. _____

4. Two 110 VAC/60Hz/20A grounded outlets within 6 feet of machine location. _____

5. Test masks and coated, dehydrated wafers for use in verifying machine operation. _____

At time of installation, the lab should be set up to a point that test prints can be made and evaluated.

Figure 6 - 1 Checklist for Machine Installation

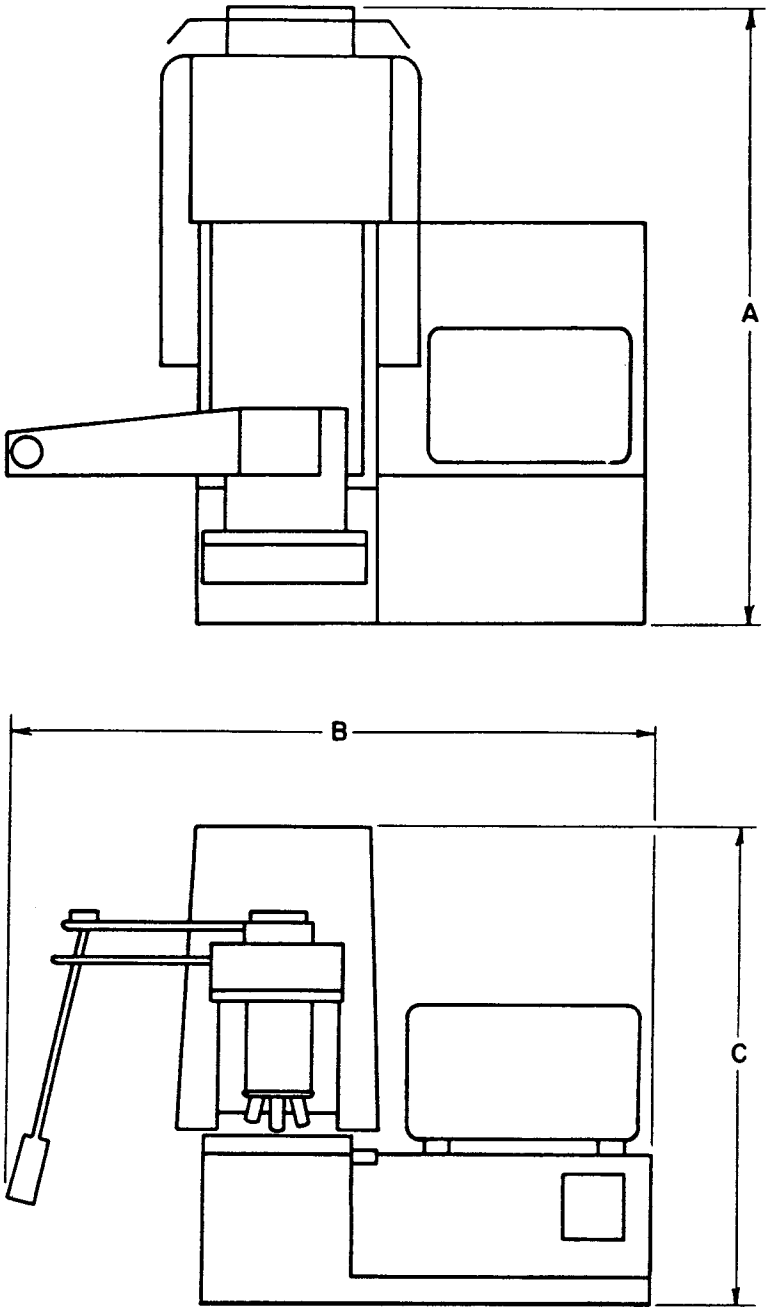

DIMENSIONS

	DEPTH A	WIDTH B	HEIGHT C
MJB 3 Standard	700 mm (27.6")	625 mm (25")	550 mm (21.7")
MJB 3 HP/200W	700 mm (27.6")	625 mm (25")	550 mm (21.7")
MJB 3 HP/350W	760 mm (30")	625 mm (25")	550 mm (21.7")

Figure 6 - 2 Suss MJB 3 Footprint

7 WARRANTY AND LIMITATIONS

In most cases, KARL SUSS mask aligners carry a six month warranty covering labor, material, and workmanship. This warranty may vary for different areas around the world. Please consult the specific warranty terms outlined in your quotation for the particulars pertaining to your machine.

7.1 Scope

This warranty is limited to:

a. equipment unpacked and installed by KARL SUSS representatives.

b. equipment that is used and operated in accordance with the Operator's Reference Manual.

c. equipment that is properly maintained on a regular basis.

This warranty excludes:

a. damage during shipment. (Claims must be presented to the carrier or as determined by local practice.)

b. any items that are subject to wear during normal operation of the equipment, such as exposure lamps, maskholders, chucks, and the rubber lips for vacuum chucks.

All implied warranties, including warranties of merchantability and fitness for a particular purpose are limited in duration to the length of this warranty, unless otherwise provided by state law.

The liability of KARL SUSS is limited to the repair or replacement, at our option, of any defective product and shall in no event include incidental or consequential commercial damages of any kind.

7.2 Exposure Lamp Explosions

If an exposure lamp explosion should occur, please return the lamp socket and several of the glass fragments to KARL SUSS. We will contact the lamp manufacturer and try to determine the cause of the explosion. If the failure of the lamp is due to faulty workmanship or material, we will replace the lamp at no cost.

Consequential damage to the optics or lamphouse due to a lamp explosion is not covered by this warranty. It is important that you follow all lamp starting, adjustment, and cooling procedures, and that you do not exceed the recommended life of the lamp. We strongly suggest that you use only exposure lamps provided by KARL SUSS. Lamp explosions are nearly always caused by improper adjustment and/or operation of the exposure lamp.

7.3 Who Is Protected

This warranty is offered only to the original purchaser of the equipment.

7.4 How To Receive Warranty Service

U.S., Canada, and Mexico

1. Call Customer Service at 802-244-7884 during normal working hours, Eastern time.

2. Be prepared to furnish the following information (if available):

   a. Your company name, address, and telephone number with the name and telephone number or extension of the individual whom we may contact if necessary for further technical information regarding the problem.

   b. Model and serial number of the machine.

   c. A list of the peripheral equipment which may be associated with the machine and a description of the connections.

   d. A brief description of the problem.

3. Based on the information which you have provided, Customer Service will provide you with further instructions, and put you in touch with a SUSS field service representative.

International

The KARL SUSS office which processed your original order or currently handles your customer account can give you specific instructions about how to obtain warranty service.

8 APPENDIX

8.1 Discussion of Manual Alignment

Manual alignment is typically performed at an alignment gap which fully exploits the depth of focus of the microscope used. This ensures the least chance of damage to the mask or the substrate during alignment.

The depth of focus of a microscope is directly related to its magnification. For a typical alignment gap of about 20 microns (which is a reasonably safe distance between mask and wafer for most applications) the magnification is limited to about 180X which may not be sufficient to obtain the level of alignment accuracy required. However, increasing the magnification to 400X, for instance, drastically reduces the depth of focus to about 3 microns. For all practical purposes, it is impossible to perform alignments at such a small gap.

The line and space resolution of an alignment microscope of the maximum practical magnification (180X) is about 1.5 microns. Fortunately, it is not necessary to recognize submicron features in order to achieve submicron alignment accuracy. Instead, we use a different approach.

The human eye has a remarkable ability to recognize symmetry. The challenge in designing appropriate alignment marks therefore consists of finding schemes where some kind of symmetry is apparent using high contrast patterns. The simplest example is placing a small cross inside a large cross. The line width of the small cross is not significant if both sides of the cross can be seen without excessive eye movement. The distance between the edge of the smaller line and the larger line when both crosses are aligned is critical, however. This distance must be larger than the minimum feature size for the given line and space resolution of the microscope, but at the same time it has to be as small as possible.

The absolute minimum distance is about 2 microns, with typical values being between 3 and 5 microns, depending on contrast and edge quality. If the distance between the small line and the large line is 3 microns, a 0.5 micron misalignment will result in a 3.5/2.5 intensity ratio as read by the eye. This is a significant amount since the larger gap is 40% brighter than the smaller gap.

In proximity printing, the alignment gap and exposure gap are of the same order of magnitude, and so are usually handled with the same objective/eyepiece combination.

In contact printing, however, since the exposure gap is considerably smaller than the alignment gap, an objective/eyepiece combination with a small depth of focus can be used to verify the alignment at exposure position before the exposure takes place. A turret microscope using at least two different objectives is the ideal tool for this purpose.

In this case, a second adjustment key with smaller dimensions (for example, a 1 micron distance between the smaller and the larger lines) can be employed if desired to make checking the alignment in exposure position easier. For the highest alignment accuracy, it is likely that the operator will have to alternate repeatedly between the separation and contact positions, even if the aligner itself has no shift.

Regrettably, there is no simple way around the problem of performing alignment with insufficient magnification.

8.2 Microscope Descriptions

8.2.1 SUSS Normalfield Microscope M400

The SUSS M400 microscope (Figure 8-1) consists of the microscope head (either binocular or trinocular), eyepieces, microscope body, illuminator, objective turret and objectives. The microscope is equipped with a 4 objective turret. The SUSS M400 is offered in two versions: brightfield only and a brightfield/darkfield/interference contrast combination. Interference contrast and darkfield operation are only possible with certain objectives (Figure 8-2).

8.2.1.1 Microscope Head and Eyepieces

A binocular or trinocular head is available. The eyepieces may be exchanged by simply removing one set from the eyepiece tubes and replacing them with another set. An image is obtained in the trino-tube by pulling out the lever located on the left side of the head. The choice of eyepieces is dependent on the magnification desired (Figure 8-2).

8.2.1.2 Microscope Body

The microscope body contains a half mirror which reflects the microscope illumination onto the object and transmits the object image to the eyepiece image plane. In the brightfield/darkfield/interference contrast version, the microscope body also incorporates a slide containing the analyzer which is used for interference contrast illumination.

8.2.1.3 Objective Turret

There are detents for each objective position. The turret is rotated by grasping the turret (not the objectives!) and turning it to the detent.

8.2.1.4 Illuminator

The illuminator uses a 15W lamp which is powered from an adjustable transformer. Note that settings greater than "6" on the transformer should only be used for brief periods as this will drastically reduce the life of the lamp. An iris diaphragm is built into the body of the illuminator which can be used to obtain an optimum image.

In addition, on the brightfield/darkfield/interference contrast version, there are two slides built into the illuminator body. The first contains the polarizer plate which is used in conjunction with the analyzer to obtain interference contrast illumination. The polarizer may be rotated to obtain an optimum image using the lever. The second contains the darkfield stop which is inserted into the light path to obtain darkfield illumination.

To exchange the illumination lamp, slide the lamp socket out from the illuminator body. Exchange the lamp and re-insert the lamp socket. The three screws on the lamp socket may be used to center the lamp filament, and should be positioned so that approximately 5 mm of thread is exposed.

8.2.1.5 Darkfield Illumination (if equipped)

To obtain darkfield illumination, proceed as follows:

a. Rotate the turret to bring the darkfield objective (5.5x) to the observation position.

b. Insert the darkfield stop into the illuminator light path by pulling the slide toward the operator.

c. Ensure that the polarizer and analyzer are not in the light path (Refer to "Interference Contrast Illumination").

8.2.1.6 Interference Contrast Illumination (if equipped)

To obtain interference contrast illumination, proceed as follows:

a. Rotate the turret to bring an interference contrast objective (5xIC or 10xIC) to the observation position.

b. Insert the analyzer into the light path by pulling the analyzer slide out of the microscope body toward the operator.

c. Insert the polarizer into the illumination light path by pulling the polarizer slide toward the operator.

d. Ensure that the darkfield stop is not in the light path. (Refer to "Darkfield Illumination").

e. Rotate the polarizer using the lever to obtain an optimum image.

8.2.1.7 Objectives

Objectives may be of the brightfield, interference contrast or darkfield type. (Refer to Figure 8-2.) Objectives with higher magnification have a restricted depth of focus which allows observation of the mask and wafer only in contact position or at a small separation distance. Note that the positions of the interference contrast objectives or the darkfield objectives should not be exchanged in the turret.

8.2.2 SUSS Splitfield Revolver Microscope: M200 - 200 Series

NOTE: Some machines may incorporate the SUSS M204 Microscope. If so, please refer to Figure 8-5 for magnification and optical data.

The SUSS M200 Microscope (Figure 8-3) consists of the microscope head (either binocular or trinocular), eyepieces, microscope body, illuminator, and objectives. The choice of eyepieces and objectives depends on the magnification desired. The SUSS M200 is offered in three versions: brightfield only, brightfield/darkfield, and brightfield/ interference contrast. Darkfield and interference contrast operation are only possible with certain objectives. (Refer to Figure 8-4 for magnification and optical data on the SUSS M200, or Figure 8-5 for similar data on the SUSS M204.)

8.2.2.1 Microscope Head and Eyepieces

A binocular or trinocular head is available. The eyepieces may be exchanged by simply removing one set from the eyepiece tubes and replacing them with another set. An image is obtained in the trino-tube by pulling out the lever located on the left side of the head. The choice of eyepieces is dependent on the magnification desired. Rotation of the microscope may be performed by turning the knurled screw located under the microscope head.

8.2.2.2 Microscope Body

The microscope body contains prisms, optical shutters for selection of either singlefield or splitfield operation, and half mirrors which reflect the microscope illumination onto the object and transmit the object image to the eyepiece image plane. In the interference contrast version the microscope body also incorporates a slide containing the analyzer which is used for interference contrast illumination.

There are two small knurled knobs located on the front of the microscope body. Each light path of the microscope incorporates a shutter separately adjustable by these knobs. These permit selection of the image to be viewed:

a. Left hand half image and right hand half image (splitfield).

b. Full left hand image.

c. Full right hand image.

The distance between the objectives may be adjusted continuously between 26 mm and 100 mm using the two knurled knobs located on the bottom of the microscope body. In addition, a minimum distance of 14 mm or a maximum distance of 120 mm can be attained by two optional pivoting attachments. Both the sharpness of the microscope image and the scale of magnification are retained when changing the distance between the objectives. Fine adjustment of the image sharpness is effected by the same knobs.

8.2.2.3 Illuminators

Two types of illuminators are available. For brightfield operation only, two fiber-optic light guides connected to a lamphouse are normally used. For darkfield or interference contrast operation, two 15W direct illuminators are normally used. In both cases, the brightness is controlled by an adjustable transformer. Two iris diaphragms are built into the body of the illuminators which can be used to obtain a optimum image.

To exchange the illumination lamps of the direct illuminators, slide the lamp socket out from the illuminator body. Exchange the lamp and re-insert the lamp socket. The three screws on the lamp socket may be used to center the lamp filament, and should be positioned so that approximately 5 mm of thread is exposed.

The illumination lamp of the fiber optic illuminator is easily replaced by removing the lamphouse cover.

8.2.2.4 Darkfield Illumination (if equipped)

To obtain darkfield illumination, adapters with pivotable central stops are inserted into the illuminator light path. The normal objectives are replaced by brightfield/darkfield objectives (5.5X) with concentric condensers. Conversion from the brightfield to the darkfield mode and vice versa is effected by swinging the central stops in or out of the light path, respectively.

8.2.2.5 Interference Contrast Illumination (if equipped)

For interference contrast illumination, the unit is equipped with revolvable polarizers, objectives with Wollaston prisms, and an analyzer built into the microscope body. To obtain interference contrast illumination, proceed as follows:

a. Insert the analyzer into the light path by pulling the analyzer slide out of the microscope body towards the operator.

b. Insert the polarizers into the illuminator light path by pulling the polarizer slides toward the operator.

c. Rotate the polarizers using the levers to obtain an optimum image.

8.2.2.6 Objectives

Objectives may be of the brightfield, interference contrast, or darkfield type. (Refer to Figure 8-4 or Figure 8-5.) Note that each set of objectives is individually adjusted to the microscope. Therefore, their positions should not be exchanged. Replacement of a set of brightfield objectives with another set of higher magnification is possible, however, replacement with another set of lower magnification may result in some deterioration in image quality. In this case, the microscope should be returned to KARL SUSS for readjustment. Please call your KARL SUSS Customer Service representative for further instructions.

8.2.3 SUSS Splitfield Turret Microscope: M230 - 200 Series

The SUSS M230 Microscope (Figure 8-6) consists of the microscope head (either binocular or trinocular), eyepieces, microscope body, illuminator, two objective turrets, and six objectives. The eyepiece and objective combinations result in a range of magnification of 66-400X. (Refer to Figure 8-7.) The SUSS M230 is available in a brightfield version, or in a interference contrast type as an option.

8.2.3.1 Microscope Head and Eyepieces

A binocular or trinocular head is available. The eyepieces may be exchanged by simply removing one set from the eyepiece tubes and replacing them with another set. An image is obtained in the trino-tube by pulling out the lever located on the left side of the head. The choice of eyepieces is dependent on the magnification desired. Rotation of the microscope may be performed by turning the knurled screw located under the microscope head.

8.2.3.2 Microscope Body

The microscope body contains prisms, optical shutters for selection of either singlefield or splitfield operation, and half mirrors which reflect the microscope illumination onto the object and transmit the object image to the eyepiece image plane.

There are two small knurled knobs located on the front of the microscope body. Each light path of the microscope incorporates a shutter separately adjustable by these knobs. These permit selection of the image to be viewed:

a. Left hand half image and right hand half image (splitfield)

b. Full left hand image

c. Full right hand image

8.2.3.3 Objective Turrets

Each turret incorporates detents for each objective position. The turret is rotated by grasping the turret (not the objectives!) and turning it to the detent.

8.2.3.4 Illuminators

Two fiber optic light guides connected to a lamphouse are used. The brightness is controlled by an adjustable transformer. Two iris diaphragms are built into the body of the illuminators which can be used to obtain an optimum image.

The illumination lamp is easily replaced by removing the lamphouse cover.

8.2.3.5 Objectives

Three pairs of objectives are normally supplied: 3.5X, 10X, and 25X. The 25X objectives have a restricted depth of focus which allows observation of the mask and wafer only in contact position. Therefore the 3.5X and 10X objectives should be used for alignment and the 25X objective for checking alignment. Note that each objective is individually adjusted to the microscope. To retain parfocality of the objectives, they should not be removed from the turret. (Refer to Figure 8-7.)

8.3 Scanning Infrared Viewing System for Backside Alignment (Optional)

Each SUSS MJB 3 is equipped with a video camera, monitor, and special tooling enabling the printing of features on one side of wafers aligned to features on the other. The Infrared (IR) mode or normal operating mode may be selected with a minimum of conversion time.

In the IR mode, a special chuck transparent to the IR spectrum is used (refer to Figure 8-8). The lamp under this chuck has a high output in the IR range. This IR radiation is transmitted through the chuck and the wafer to the microscope and camera.

Since the infrared source is always directly below the microscope objective, any point within the scan field, which is slightly less than two inches in diameter, can be viewed with the same infrared intensity. In addition, alignment errors due to refraction (parallax errors) are eliminated since the light source is always centered beneath the objective.

Components other than those described in the SUSS MJB 3 Operator's Reference Manual have been supplied with your machine. Please familiarize yourself with the Operator's Manual for the conventional MJB 3 so that you may better understand the description of the IR system.

The differences between the conventional machine and the IR system are explained and grouped under the following subassemblies:

- Alignment Stage
- Microscope Manipulator
- Electric Control
- Operation

8.3.1 Alignment Stage

The maskholder is removed and inserted from the front of the alignment stage with the securing knobs on the left side. The mask is held by vacuum as described in the Operator's Manual.

The transport slide has two clear hoses attached to it from the machine base. The larger diameter hose supplies the vacuum for the pre-vacuum feature. The smaller diameter hose is attached to a throttle at the base of the stage on the right side and provides the vacuum to secure the wafer to the IR exposure chuck and is attached to the left side of the pre-vacuum switch block. When the IR chuck is used, the other end of this hose attaches to the chuck and supplies the vacuum to secure the wafer to the chuck. It also supplies the nitrogen for the hard contact exposure mode. When the MJB 3 is used with non-IR chucks, an adapter ring is fitted into the wafer transport. This ring accommodates normal MJB 3 chucks, and the hose fastens to the right side of the ring. In this mode, pre-vacuum is supplied only to standard chucks.

A small diameter clear hose is located at the chuck mounting plate which is the smooth metal plate at the center of the alignment stage. This is used with the IR chuck adapter to supply cooling nitrogen to the IR lamp. It is controlled by the throttle marked "Purge" on the manometer box.

Two types of exposure chucks are available - each type has special adapters that adapt the chucks to the machine.

The IR chucks are constructed of a material transparent to the IR Wavelength range. The IR chuck is placed in the transport slide, and the small clear hose is attached to its right side. A special adapter is then placed on the chuck mounting plate. This adapter has a semicircular cutout in the top to allow the IR lamp to travel, and has locating pins in the bottom to properly position it on the chuck mounting plate. A small clear hose attaches to the right side of the adapter to provide cooling for the IR lamp. When the adapter is properly positioned on the chuck mounting plate, the cutout will be on the left side. The IR chucks allow exposure in either the hard contact, soft contract, or proximity modes, as described for a conventional MJB 3.

To operate the MJB 3 without the IR mode, any normal MJB 3 exposure chuck may be used. A ring adapter is placed in the transport slide, and the clear hose is attached to

its right side. The exposure chuck is then simply placed into this adapter ring. Additionally a second adapter is used for non-IR exposure chucks. It is cylindrical, and is placed in the center of the chuck mounting plate. This adapter supplies the vacuum to the exposure chuck. In this mode there is the option of any of the four exposure modes which are described for the conventional system, depending on the type of exposure chuck and model of machine.

8.3.2 Microscope Manipulator

The microscope manipulator has an assembly attached to the left side that supports the IR lamp. The lamp may be inserted or retracted from under the exposure chuck. When the lamp is inserted, it is located directly under the microscope viewing objective, as the microscope and lamp are scanned. During exposure, the lamp automatically retracts before the mirrorhouse comes forward. In the non-IR mode, the lamp remains in the retracted position. The lamp is a 12 V, 20W, halogen type and is readily available under P/N 61000256 from KARL SUSS.

8.3.3 Electronics Control

The SUSS MJB 3 IR System has an electronics control module that should be placed to the left of the machine. The controls and connections are described below:

Rocker - The rocker type power switch is located on the rear panel, next to the power cord connection.

Fuse - The main power fuse is a 1 amp fast blow type. To replace, insert a small screwdriver in the notch on the fuse folder and pry it out. The fuse snaps into this holder. After the fuse has been replaced, press the fuse holder back into its frame.

> **CAUTION:** Disconnect the main power from the unit before replacing the fuse.

NOTE: If the replacement fuse blows immediately when power is applied, turn the unit off and contact qualified service personnel.

Electrical Connections - There are five electrical connections on the rear panel of the electronics control module: the power cable, and four screw-on plugs. The plugs include:

2-pin plug - foot switch
3-pin plug - microscope illumination
5-pin plug - connection of electronics control module to the MJB 3 base
7-pin plug - IR lamp assembly

Microscope Illumination - This front panel knob controls the intensity of the microscope illumination. Turning it clockwise will increase the illumination.

IR Illumination - This front panel knob adjusts the intensity of the IR illumination when the foot switch is pressed. Turning the knob clockwise will increase the illumination.

Power Lamp - This indicator will be illuminated when the main power is supplied to the unit.

Scanner Switch - This switch has two positions. To use the IR mode, place the switch in the Automatic position. This will cause the IR lamp to be inserted under the exposure chuck for alignment, and also cause it to be retracted for exposure. If the IR mode is not wanted, place the switch in the manual position. The lamp will be retracted from under the exposure chuck and will remain in that position.

Foot Switch - The foot switch is connected to the rear panel of the electronics control module. While it is depressed, power will be supplied to the IR lamp.

Operation - Operation of the MJB 3 is as described in Section 2.3 for the conventional system. Below are the steps necessary to set the machine up for either IR or non-IR operation.

8.3.4 IR Mode Operation

1. Switch on the camera, monitor, and electronics control module.

2. Place the IR chuck adapter on the chuck mounting plate. Connect the cooling hose to the fitting and open the purge throttle on the manometer box one and one half turns.

3. Place the IR chuck in the transport plate and connect the clear hose to the right side of the chuck.

4. Open completely the vacuum control throttle at the lower right rear corner of the alignment stage.

5. Push the HP/ST button on the MJB 3 control panel to the ST position.

   NOTE: Whenever an IR chuck is used, the ST mode must be selected.

6. Place the scanner switch on the electronics control module in the automatic position.

7. Place the wafer on the chuck with the wafer features down. The wafer may be mounted on an IR transparent carrier, i.e. quartz, glass, or Al_2O_3.

8. Insert the wafer and chuck into the stage and bring the wafer to the separation position for alignment (refer to Sections 2.3.2 and 2.3.3).

9. Press the foot switch. Observe the image on the video monitor and rotate the microscope focus adjustment to obtain the clearest image. Depending on application, it may be helpful to use the normal microscope illumination to illuminate the mask. Also adjust the illumination level of the IR lamp to obtain the best image. Under normal circumstances, a 5x or 10x objective will provide the best combination of resolution and depth of focus.

10. Perform the alignment in the usual way (refer to Section 2.3.3), using the image on the video monitor.

11. When satisfactory alignment has been obtained, continue as outlined in Sections 2.3.4 (Exposure) and 2.3.5 (Unloading the Substrate).

8.3.5 Non-IR Operation

1. Place the scanner switch on the electronics control module in the Manual position.

2. Place the cylindrical adapter on the chuck mounting plate.

3. Place the adapter ring in the transport slide and connect the clear hose to its right side.

4. Place the exposure chuck into the adapter ring.

5. Close completely the vacuum control throttle at the lower rear corner of the alignment stage.

6. Close the purge throttle on the manometer box.

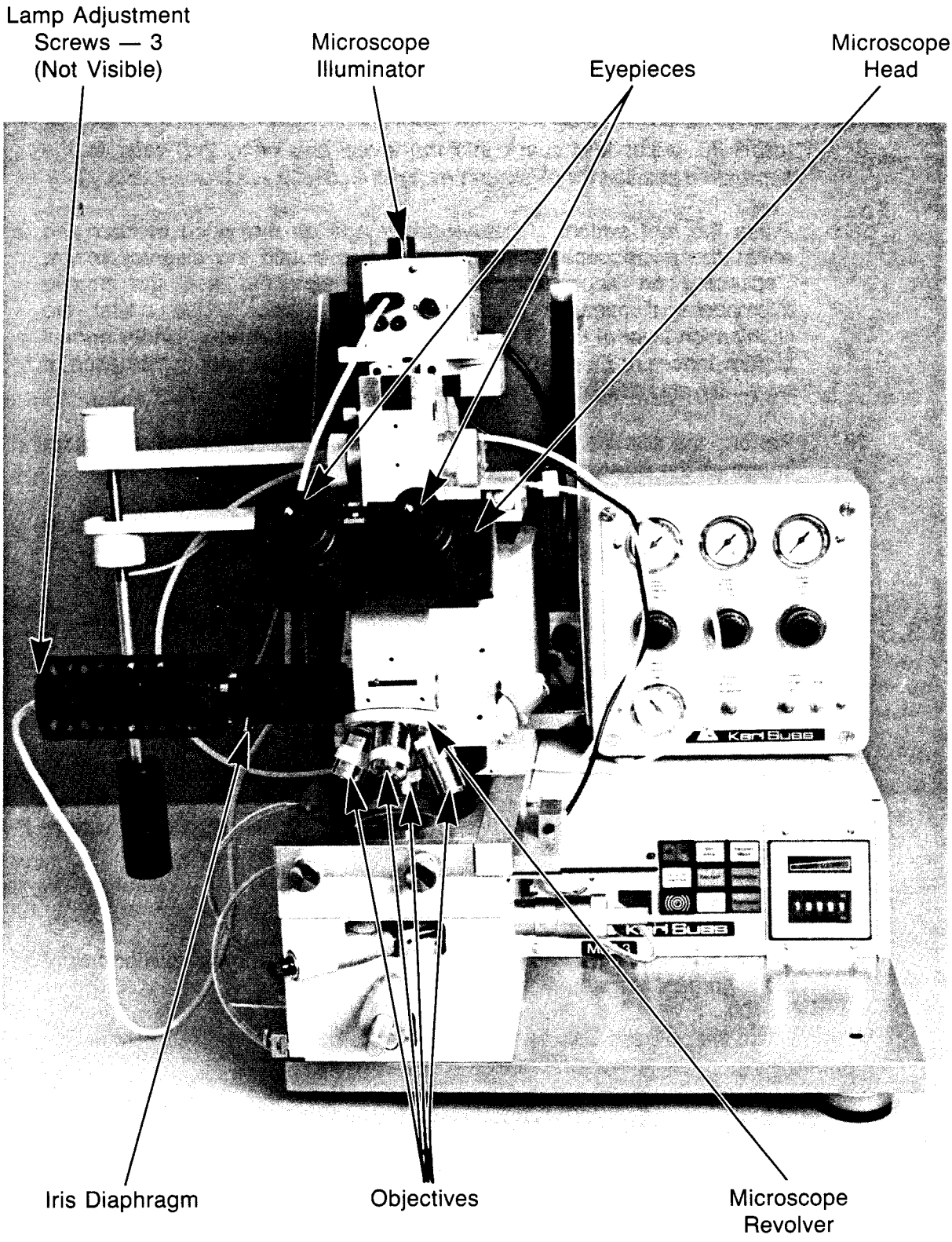

Figure 8 - 1 Normalfield Microscope M400

SUSS M400 Normalfield Microscope

OBJECTIVE	PL 3.2X			NPL 5X			5.5X EPI			NPL 10X			PL 25X			H 32X		
NUMERICAL APERTURE	0.06			0.09			0.15			0.20			0.40			0.6		
EYEPIECE (X)	6.3	10		6.3	10		6.3	10		6.3	10		6.3	10		6.3	10	
FIELD OF VIEW (mm)	5.6	5.6		3.6	3.6		2.0	2.0		1.8	1.8		0.7	0.7		0.5	0.5	
TOTAL MAGNIFICATION	20	32		31	50		56	90		63	100		160	250		200	320	
DEPTH OF FOCUS (µm)	120	80		100	70		40	25		25	20		8	8		3.5	2.0	
AT MAXIMUM RESOLUTION (µm)	5.0	3.5		4.0	2.5		2.0	1.25		1.6	1.0		1.2	0.8		0.8	0.5	
WORKING DISTANCE (mm)	12			12			13			BF -17 IC -12			11			10		
ILLUMINATION TYPE	BF			BF and BF/IC			BF, DF			BF and BF/IC			BF			BF		

BF = Brightfield DF = Darkfield IC = Interference Contrast

Figure 8 - 2 Magnification and Optical Data SUSS M400 Microscope

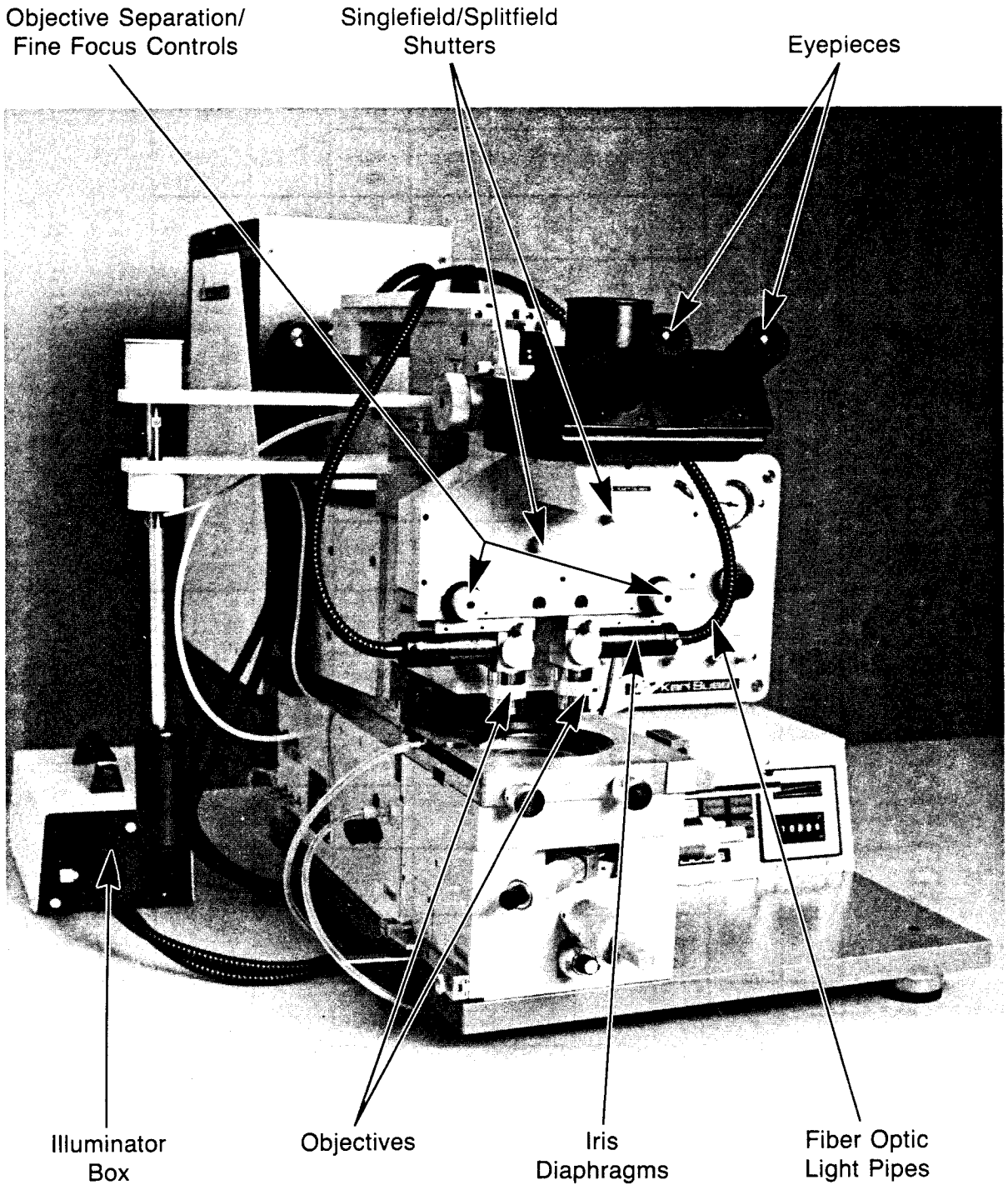

Figure 8 - 3 Splitfield Microscope M200

SUSS M200 Splitfield Microscope

OBJECTIVE	PL3.5X [1]			NPL 5X IC			5.5X EPI [2]			NPL 10X			PL25X					
NUMERICAL APERTURE	0.08			0.09			0.15			0.20			0.40					
EYEPIECE (X)	6.3	10		6.3	10	12.5	6.3	10		6.3	10	12.5	6.3	10				
FIELD OF VIEW (mm)	1.5	1.5		1.9	1.9	1.9	1.25	1.25		0.95	0.95	0.95	0.42	0.42				
TOTAL MAGNIFICATION	75	115		50	90	110	90	140		120	180	230	270	430				
DEPTH OF FOCUS (µm)	80	50		80	60	60	30	20		25	20	15	3	3				
AT MAXIMUM RESOLUTION (µm)	3.2	2.0		5.0	3.0	3.0	2.0	1.2		2.0	1.0	1.0	1.0	1.0				
WORKING DISTANCE (mm)	13.5			15.0			14.5			17.5			9					
ILLUMINATION TYPE	BF			BF/ IC			BF/ DF			BF or BF/IC			BF					

BF = Brightfield DF = Darkfield IC = Interference Contrast

(1) corresponds to magnification 8 x ∞ in SUSS M200 Microscope (2) corresponds to magnification 9 x ∞ in SUSS M200 Microscope

Figure 8 - 4 Magnification and Optical Data SUSS M200 Microscope

SUSS M204 Splitfield Microscope

OBJECTIVE	PL3.2X			NPL 5X			NPL 10X			LL 20X IC			PL25X					
NUMERICAL APERTURE	0.06			0.09			BF - 0.20 IC - 0.22			0.40			0.40					
EYEPIECE (X)	6.3	10	12.5	6.3	10		6.3	10	12.5	6.3	10	12.5	6.3	10	12.5			
FIELD OF VIEW (mm)	4.6	4.6	4.6	3.0	3.0		1.5	1.5	1.5	0.75	0.75	0.75	0.6	0.6	0.6			
TOTAL MAGNIFICATION	25	38	48	31	50		75	120	150	150	240	300	190	300	375			
DEPTH OF FOCUS (µm)	100	80	80	80	60		25	20	20	8	4	4	5	3	3			
AT MAXIMUM RESOLUTION (µm)	5.0	3.5	3.5	4.0	2.5		1.6	1.25	1.25	1.2	1.0	1.0	1.2	0.8	0.8			
WORKING DISTANCE (mm)	12			12			BF - 17 IC - 12			10			11					
ILLUMINATION TYPE	BF			BF and BF/ IC			BF and BF/ IC			IC			BF					

BF = Brightfield DF = Darkfield IC = Interference Contrast

Tube factor = 1.2X

(1) Total Magnification: Objective x Eyepiece x Tube Factor (1.2)

Figure 8 - 5 Magnification and Optical Data SUSS M204 Microscope

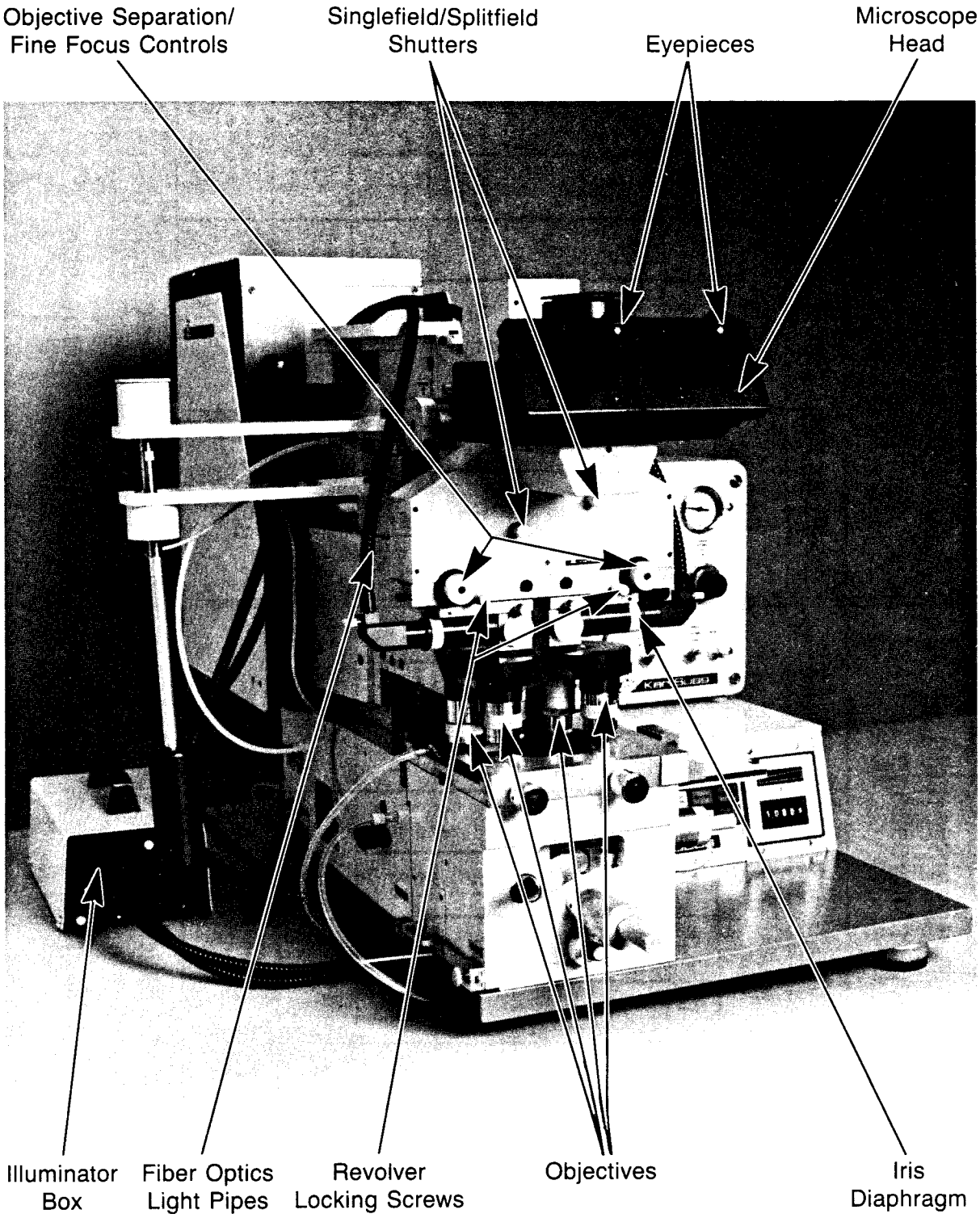

Figure 8 - 6 Splitfield Revolver Microscope M230

	SUSS M230 Splitfield Turret Microscope									SUSS M230 Interference Contrast Splitfield Turret Microscope								
OBJECTIVE	PL 3.5X (1)			NPL 10X			PL 25X			NPL 5X IC			NPL 10X IC					
NUMERICAL APERTURE	0.08			0.20			0.40			0.09			0.20					
EYEPIECE (X)	6.3	10		6.3	10		6.3	10		6.3	10		6.3	10				
FIELD OF VIEW (mm)	1.3	1.3		0.85	0.85		0.42	0.42		2.0	2.0		0.85	0.85				
TOTAL MAGNIFICATION	80	130		130	200		270	430		55	90		130	200				
DEPTH OF FOCUS (µm)	60	40		20	15		3	3		90	70		20	15				
AT MAXIMUM RESOLUTION (µm)	3.2	2.0		2.0	1.2		1.0	1.0		4.0	2.5		2.5	1.5				
WORKING DISTANCE (mm)	12			17.5			9			13			13					
ILLUMINATION TYPE	BF			BF			BF			BF/IC			BF/IC					

BF = Brightfield DF = Darkfield IC = Interference Contrast

(1) corresponds to magnification 8 x ∞ in SUSS M200 Microscope

Figure 8 - 7 Magnification and Optical Data SUSS M230 Microscope

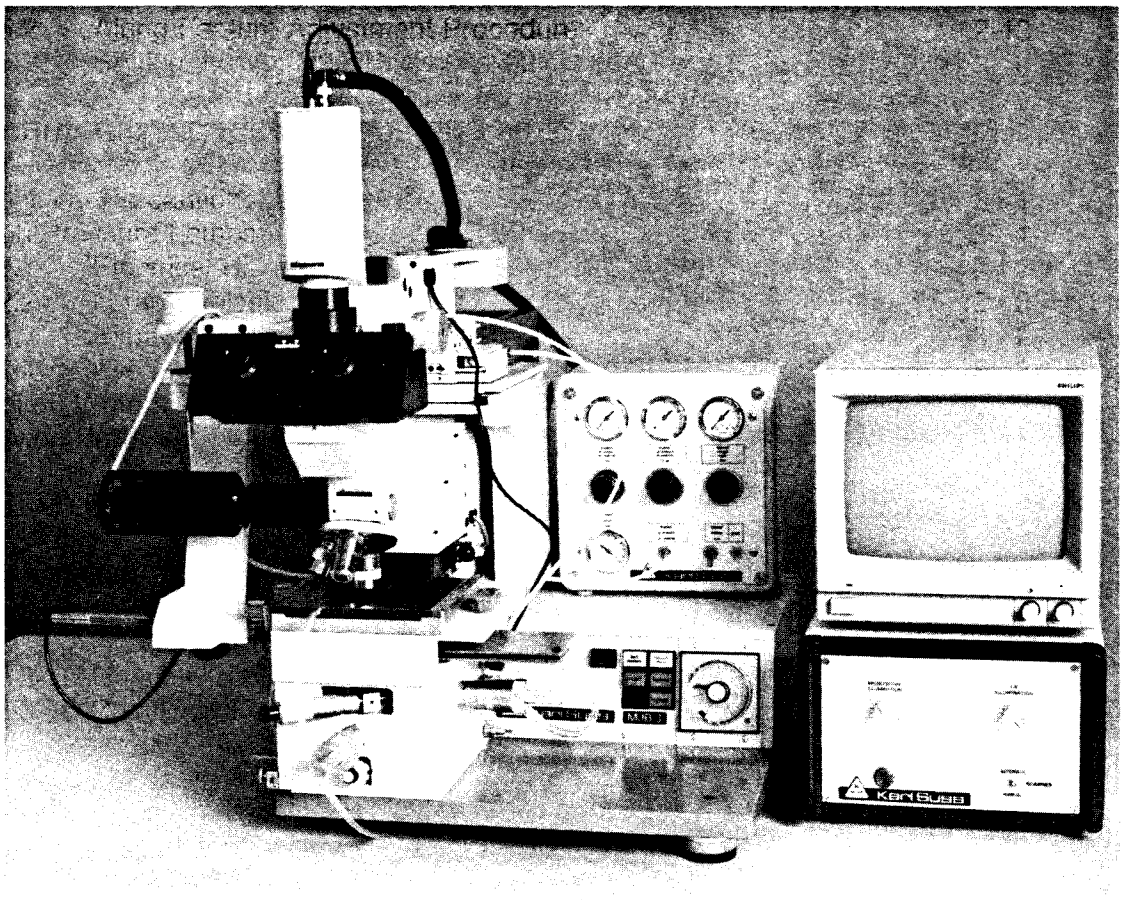

Figure 8 - 8 SUSS MJB 3 Scanning IR System

SUSS

CONSTANT INTENSITY CONTROLLER

Operator's Reference Manual

1. WARNINGS AND SAFETY HAZARDS
2. INSTALLATION
3. GENERAL DESCRIPTION AND PRINCIPLES OF OPERATION
4. OPERATING PROCEDURES
5. QUALITY STANDARDS
6. MAINTENANCE AND SERVICE
7. WARRANTY AND LIMITATIONS

This Operator's Reference Manual is subject to review and/or revision.

P/N 080AA013
R1 0395

Karl Suss

TABLE OF CONTENTS

1. WARNINGS AND SAFETY HAZARDS ---- 1-1
- 1.1 Electrical Precautions ---- 1-1
- 1.2 High Pressure Lamps ---- 1-2
  - 1.2.1 Electrical Hazards ---- 1-2
  - 1.2.2 Lamp Explosion ---- 1-2
    - 1.2.2.1 In Case of Lamp Explosion ---- 1-3
  - 1.2.3 Exhaust Requirements ---- 1-3
  - 1.2.4 Eye and Skin Safety ---- 1-3

2. INSTALLATION ---- 2-1
- 2.1 Unpacking ---- 2-1
  - 2.1.1 Inspection ---- 2-1
  - 2.1.2 Instruction in Case of Damage ---- 2-1
- 2.2 Environmental Requirements ---- 2-2
  - 2.2.1 Utilities Required ---- 2-2
  - 2.2.2 EMI Filter Box Interconnection ---- 2-2
  - 2.2.3 Physical Environment ---- 2-2
  - 2.2.4 Exhaust Requirements ---- 2-2
- 2.3 Coupling Procedures (Ref.: Figs. 3-1 and 3-2) ---- 2-3
  - 2.3.1 Lamp Connections ---- 2-3
  - 2.3.2 Optical Sensor ---- 2-4
  - 2.3.3 Lamp Ignition Inhibit Interface ---- 2-4
  - 2.3.4 Lamp Cooling Interface (N2 Loss) ---- 2-5
  - 2.3.5 Isolating Difficulties ---- 2-5

3. GENERAL DESCRIPTION AND PRINCIPLES OF OPERATION ---- 3-1
- 3.1 The Short Arc Lamp System ---- 3-1
  - 3.1.1 Arc Lamps ---- 3-1
  - 3.1.2 Lamp Housing ---- 3-2
  - 3.1.3 Power Supply ---- 3-2
  - 3.1.4 Constant Intensity ---- 3-3
- 3.2 Principles of Operation ---- 3-3
  - 3.2.1 Constant Power Control Loop ---- 3-3
  - 3.2.2 Optical Control Loop ---- 3-5
  - 3.2.3 Optical Sensor ---- 3-5
- 3.3 Technical Specifications ---- 3-6
  - 3.3.1 CIC 500 Constant Intensity Controller ---- 3-6
  - 3.3.2 CIC 1000 Constant Intensity Controller ---- 3-7

4. OPERATING PROCEDURES ---- 4-1
- 4.1 Front Panel Controls and Functions (Ref.: Figure 4-1) ---- 4-2
  - 4.1.1 Selecting the Operating Configuration ---- 4-5
  - 4.1.2 Lamp Selection ---- 4-5
  - 4.1.3 Display Test ---- 4-6
  - 4.1.4 Standby ---- 4-6
  - 4.1.5 Alarm ---- 4-6
  - 4.1.6 Lamp Hours ---- 4-6
  - 4.1.7 Total Operating Hours ---- 4-6

4.1.8 Full Reset ---- 4-7
4.2 Rear Panel (Ref.: Figures 4-2 or 4-3) ---- 4-7
4.3 Starting the Lamp ---- 4-8
4.4 Optical Sensor Gain Calibration ---- 4-9
4.5 Optical Calibration ---- 4-10
4.6 System Checkout ---- 4-11

5. QUALITY STANDARDS ---- 5-1
5.1 Equipment Checks and Adjustments ---- 5-1
5.1.1 Lamp Intensity ---- 5-1
5.1.2 Light Uniformity ---- 5-1

6. MAINTENANCE AND SERVICE ---- 6-1
6.1 Self Test Failure Conditions ---- 6-1
6.2 Troubleshooting Guide ---- 6-2
6.3 Main Power Selection ---- 6-5
6.4 Service Information ---- 6-5
6.4.1 Technical Assistance ---- 6-5
6.4.2 Factory Repairs ---- 6-6

7. WARRANTY AND LIMITATIONS ---- 7-1
7.1 Scope ---- 7-1
7.2 Who is Protected ---- 7-2
7.3 How to Receive Warranty Service ---- 7-2

LIST OF FIGURES

FIGURE 3-1 BLOCK DIAGRAM, CONSTANT POWER ---- 3-4
FIGURE 3-2 BLOCK DIAGRAM, OPTICAL CONTROL LOOP ---- 3-5
FIGURE 4-1 FRONT PANEL ---- 4-2
FIGURE 4-2 REAR PANEL CONNECTIONS - CIC 500 ---- 4-7
FIGURE 4-3 REAR PANEL CONNECTIONS - CIC 1000 ---- 4-8

LIST OF TABLES

TABLE 2-1 LAMP ORIENTATION AND ADAPTERS ---- 2-3
TABLE 4-1 CIC LAMP TYPES ---- 4-1
TABLE 4-2 CONDENSED OPERATING INSTRUCTIONS ---- 4-12
TABLE 6-1 CIC POWER SUPPLY FUSES ---- 6-5

1. WARNINGS AND SAFETY HAZARDS

Important: This section contains information which the operator must know and understand to minimize the risk of injuries.

Karl Suss equipment is designed to protect the user against all possible hazards. After review by qualified safety personnel, the user should generate a specific safety procedure with regard to the particular application of the equipment and local codes. The user must make certain the operators are familiar with the procedure. The safety procedure should also be posted in a conspicuous location so that all equipment operators are exposed to the information on a continuing basis.

1.1 Electrical Precautions

When the covers or connectors are removed from the power supply, dangerous voltages will be exposed. When all of the covers and connectors are in place, there is no danger from these voltages.

The electrical system should be serviced by qualified personnel only so it will never be necessary for the operator to open the cover of the electrical portion of the mask aligner. If any problems occur with the power supply, turn the machine off and notify your supervisor or maintenance immediately.

Caution: Never open the housing while the power line is connected.

1.2 High Pressure Lamps

The light source for the concentrated ultraviolet illumination required to expose the wafer is a high pressure lamp. Special precautions must be taken when working with these lamps.

1.2.1 Electrical Hazards

The voltage and current required to run a high pressure lamp constitute a lethal combination. Starting ignition voltages are 30 KV and open circuit potentials range up to 180 VDC between 5 and 50 amps.

When performing any maintenance on the exposure lamp power supply, lamp housing, or the lamp itself, make sure that the power line to the power supply is disconnected.

Proper lamp orientation is crucial. If the applied voltage to the lamp does not agree with the lamp manufacturers recommendations, an explosion may occur. Start box lead wires are labeled POS and NEG. Insure these connections are properly oriented for the lamp in use.

1.2.2 Lamp Explosion

Since these exposure lamps operate at extremely high pressure (50 - 70 atm), explosion is certainly a possibility if the lamps are handled or operated wrongly. The lamps may fail because of improper cooling, improper setting of the power supply, usage outside the manufacturer's guidelines, etc. Additionally, some high pressure lamps, even when cold, are still above atmospheric pressure and should be handled with protective face shields and gloves.

NOTE: Careful handling of the lamp and proper operation of the equipment will substantially reduce the possibility of lamp explosions.

The lamphouse is designed to minimize damage to the interior of the equipment and prevent possible injury to the operator should a lamp explosion occur. All

assemblies and protective covers must be in place during operation of the machine.
Some of these lamps contain hazardous elements such as mercury. If a lamp should break, avoid touching the fragments and/or breathing the vapor.

1.2.2.1 In Case of Lamp Explosion

If the lamp explodes we recommend the following course of action:

- Turn power to the supply and machine off immediately.
- Evacuate the immediate area of the mask aligner to prevent inhalation of the mercury vapor. Wait at least 20 minutes before returning.
- Mercury residue and glass shards deposited inside the lamphouse should only be handled when wearing rubber gloves, goggles, and a proper face mask. The best way to remove mercury is by aspiration - the suction of a syringe or vacuum device is very effective (do not use lungs). After noticeable amounts of mercury are removed, gently wipe optics with lint free paper that is slightly dampened by a residue free liquid. Materials used in the cleanup should be treated as hazardous waste and disposed of accordingly.

1.2.3 Exhaust Requirements

High pressure lamps produce ozone because of the interaction of the radiation emitted below a wavelength of 250 nm with oxygen.
Ozone attacks the mucous membranes of the respiratory system, producing symptoms similar to pneumonia. The effects are cumulative. The smaller wattage lamps, cadmium-xenon to 200 watts and mercury to 350 watts, must be operated in a well ventilated area only. Larger wattage lamps, such as 350 watt Cd-Xe, 500 watt Hg-Xe, 500 watt Hg, and 1000 watt Hg must be exhausted from the room.

1.2.4 Eye and Skin Safety

The ultraviolet light produced by these lamps can cause erythema of the skin (similar to sunburn) and conjunctivitis. In addition, the large infrared output can cause retinal burns resulting in blindness.

Every SUSS mask aligner is equipped with light guards, and the high pressure lamp and exposure path are enclosed. The mask aligner may not be operated unless all of these protective covers and devices are in place.

2. INSTALLATION

2.1 Unpacking

2.1.1 Inspection

After removing the packing material, check to make sure that you have the following items and that your packing list agrees with the material which you have received.

a. SUSS Constant Intensity Controller
b. Dual Optical Sensor Assembly (used in CI configuration only) - may already be installed on aligner.
c. Lamp cable and start box - may already be installed on aligner.
d. Lamp cooling interface connector
e. Operator's Reference Manual
f. EMI Filter Box (With CIC 500s sold in Europe and all CIC 1000s)

When main power is applied to the CIC, the lamp selection which was set at the factory will be displayed on the front panel. A label on the connector housing of the optical sensor specifies the optical wavelength for which the sensor is set.

2.1.2 Instruction in Case of Damage

If there is any indication of shipping damage to the unit, immediately notify both the carrier who delivered the equipment and the Karl Suss office processing your order or contract. Claims for damage should be filed in accordance with standard procedures in your area.

2.2 Environmental Requirements

2.2.1 Utilities Required

The power requirements (voltage, line frequency, and maximum current) are shown on a label on the back of the unit. The CIC 500 is capable of operating at voltages from 100 VAC to 250 VAC and frequencies of 50/60 Hz. An internal switch will be set at the factory for the power option specified on your purchase order. The CIC 1000, however, is supplied only in the 220 V configuration.

2.2.2 EMI Filter Box Interconnection

When included, it is manditory that the CIC power supply receive its power from the EMI Filter Box. This unit insures compliance to European EMC requirements. When used on an aligner which supplies voltage to the CIC power supply (i.e.; MA150, MA200, etc.), the aligner itself should be connected to the EMI Filter Box. When power to the CIC is supplied directly from a wall outlet (i.e.; MA4, MA6, MJB3, etc.) the supply should be plugged into the EMI Filter Box. In all cases, the EMI Filter box should be plugged directly into a wall outlet.

2.2.3 Physical Environment

The Constant Intensity Controller is designed to operate continuously at ambient temperatures of 4 - 30 °C (40 - 86 °F) and be stored or transported at temperatures up to 60 °C (140 °F).

The unit will give the best performance and provide an extended service life if it is stored and operated in a clean, dry, non-corrosive atmosphere.

2.2.4 Exhaust Requirements

Internal cooling is provided by a fan which pulls air through slots in the chassis behind the front panel and exhausts it through the rear panel. The unit does not require any clearance along the top and the sides, however the space on the bottom between the feet should not be obstructed in any way. In addition, a minimum clearance of 15 cm (6 in) between the rear panel and any obstruction should be maintained.

Although the exhaust of the CIC consists only of heated air, the lamp itself may produce toxic emissions. See Section 1.2 for details.

2.3 Coupling Procedures (Ref.: Figs. 3-1 and 3-2)

2.3.1 Lamp Connections

The Constant Intensity Controllers incorporate remote start units that can either be mounted to the back of the lamphouse or placed close to the exposure lamphouse. The stand alone remote start unit has a cable which connects to the rear of the CIC and has connectors to attached the lamp cables. The cathode cable and connector are rated at 30 KV; the cable insulation meets MIL-W-16878 and UL62 specifications. The white cable with the large **BLACK** connector must go to the lamp **CATHODE** (+); the cable with the **RED** connector must go to the lamp **ANODE** (-).

If the remote start unit is attached to the back of the lamphouse, the connections are internal and connected at the factory. Should you need to change to a different lamp, i.e., from 350W Hg lamp to a 350 Cd-Xe lamp, refer to Table 2-1 for the proper electrical connections. Reversing Anode and Cathode connections should be done via the lamphouse terminals inside the remote start unit. Refer to the machine service manual for details.

	Powered by		Orientation	Lamphouse Adapter Part Numbers		
Lamp	CIC 500	CIC 1000	+ (Anode)	200W	350W	1000W
200W Hg	Yes	Yes	Down	30018536		
350W Hg	Yes	Yes	Down		30103207	30102987
350W Cd-Xe	No	Yes	Up			30102979
500W Hg	No	Yes	Down			
500W Hg-Xe	No	Yes	Up			30103606
1000W Hg	No	Yes	Down			30113830

Table 2-1 Lamp Orientation and Adapters

The "stand alone" remote start unit should be placed as close as possible to the exposure lamphouse. Insert the 6-pin plug into the connector on the rear panel of the unit and secure with the locking lever. The connector is a Hirschman STAKIE-5.

Cathode - Rotate the connector so that the guide tab aligns with the mating slot, then push so the two units are aligned. Engage the locking ring on its

thread and while applying forward pressure, rotate the ring until the units are fully mated and locked. This connector is an AMP Type 853350-2.

Anode - Align the mating slots of the two units and press forward until a "snap" is heard and the units are fully mated. Install the two locking screws. This connector is an AMP Type 53894-4.

To remove, reverse the procedures above.

2.3.2 Optical Sensor

It the unit has been ordered for use in the CI configuration and an optical sensor has been supplied, follow these steps to attach the optical sensor to the controller.

a. Align the connector with its mating and push forward until the locking slip engages.

b. To remove, press and hold the clip down while pulling firmly to the rear.

Additionally, ensure that if an optical sensor is being used, the unit has been set to operate in the CI mode as described in Section 4.1.1 (2).

2.3.3 Lamp Ignition Inhibit Interface

Provisions for two methods of inhibiting lamp start are made through a 4-pin Jones type jack on the rear panel.

The lamp ignition inhibit is used to prevent damage to connected equipment by the high voltage RF pulse used in starting the lamp. The usual requirement is that the associated equipment be powered down during the starting sequence. This is easily accomplished by connecting Pin 2 to the positive rail of the 24 VDC power supply in the associated equipment and Pin 1 to the ground rail. Whenever the aligner is activated, the internal start circuitry of the controller will be inhibited. Note that no other functions of the controller are modified by this condition. Additionally, lamp ignition may be inhibited by a lack of electrical contact between Pins 3 and 4 of the Jones plug.

The mating plug is a Jones or equivalent Type P-304-CCT.

2.3.4 Lamp Cooling Interface (N2 Loss)

A sensor which detects proper lamp cooling can be connected to the controller through a standard 2-pin connector on the rear of the unit. If lamp cooling is provided by a flow of air or nitrogen, a flow sensor may be installed in the cooling line. If this flow falls below a preset level, contact closure is broken.

Upon detection of loss of electrical contact at the Lamp Cooling Interface, the N2 Loss lamp on the front panel will be illuminated, and the alarm will pulsate. If the connection is restored within three minutes or so, the N2 Loss lamp and alarm will be deactivated and no further action will be taken.

If the connection is not restored, the controller will extinguish the lamp, the alarm will pulsate, and the N2 Loss lamp will flash. Once the lamp has been extinguished and the Lamp Cooling Interface connection has been restored, the alarm will cease, the N2 Loss lamp will go out, and the display will indicate "rdy". Lamp ignition can now be performed. If no flow sensor is used, the connector enclosed with the shipment must be used.

2.3.5 Isolating Difficulties

When you first install a CIC, we suggest that you start with a new short arc lamp. Check and clean all electrical contacts within the lamp housing. Be especially critical of any crimp type contacts and replace them if there is evidence of corrosion or oxidation. Most CIC malfunctions can be traced to faulty or incorrect electrical connection within the lamp housing. A few minutes spent checking at this point can prevent several hours of frustration, particularly in tracing false symptoms due to intermittent contacts. On the remote start unit, improper mating of the cathode and anode connectors will also prevent the lamp from starting. Review Section 2.3.1 and make certain that the connectors are fully inserted and engaged.

3. GENERAL DESCRIPTION AND PRINCIPLES OF OPERATION

3.1 The Short Arc Lamp System

3.1.1 Arc Lamps

Mercury, mercury/xenon, and cadmium-xenon arc lamps operate at very high pressure, producing extremely bright concentrated sources of light. The spectral distribution consists of resonant lines superimposed on a thermal radiation continuum from the heated incandescent plasma. Important characteristics common to most of these lamps are:

- A clear quartz bulb, either spherical or elliptical in shape, with extensions at opposite ends constituting the electrode terminals.
- A pair of electrodes with relatively close spacing, approximately 1 mm to 1 cm, depending upon the wattage rating (hence the term "short arc lamp").
- A filling gas or vapor through which the arc discharge takes place.
- Extreme electrical loading of the arc gap, which results in a very high luminance. This results in internal pressure of 50-70 atmospheres at bulb temperatures as high as 900 °C.
- The requirement for a momentary high-voltage ignition pulse and ballast or active circuit to limit current during operation.

Short arc lamps are efficient ultraviolet producers. Mercury produces an intense line spectrum from 230 to 400 nm. Xenon produces a UV continuum from 190 to 400 nm.

A cold mercury arc lamp will have a small pool of liquid mercury, in a bulb filled with a rare gas such as argon or krypton. The gas is necessary to start the lamp and establish the arc. At ignition the heat generated by the electrical arc begins mercury vaporization. At operating temperature all of the mercury should be vaporized. Starting from near atmospheric pressure at room temperature, these lamps will approach 50-70 atmospheres when operating. Typically, five to fifteen minutes are required for them to warm up and reach their operating pressure.

The mercury-xenon and cadmium-xenon lamps have xenon as the starting gas. The xenon speeds warm up, increases stability, and lengthens the life of the lamp.

The average life of a short arc lamp is dependent on many factors. Average life is based on deriving a useful radiant output from the lamp. During operation, atoms of tungsten are boiled off the electrodes due to the electron bombardment and are deposited on the inside walls of the quartz envelope, thereby reducing the radiant output and increasing the effective arc gap. The lamp, therefore, requires a greater voltage between the electrodes to maintain the required electrical field.

3.1.2 Lamp Housing

The Suss housing system provides all of the electrical and mechanical requirements for the operation of high pressure arc lamps. These include mounting of the lamp for stress-free expansion, explosion protection, high voltage electrical inputs and provisions for external adjustments of the lamp position and/or lens and mirrors. The housing also includes means of cooling which will maintain the lamp at its optimum operating temperature.

3.1.3 Power Supply

The power supply for an arc lamp must take into consideration the lamp's operating characteristics. Although the supply can drive the lamp over a large latitude of electrical input powers, it is the lamp characteristics alone which will dictate the actual value of voltage and current. A basic supply should have the following specifications:

- A low ripple, regulated, DC output.

- A high voltage starting circuit (15KV or higher).

- A ballast or active circuit to limit current to the lamp during the warmup period.

- A means to adjust the lamp power output.

3.1.4 Constant Intensity

The chemistry of a photoresist requires that a given amount of energy (Joules) be absorbed by the molecular structure over a finite period of time for a successful print.

It is also desirable that the process be repeatable. Since the output of a short arc lamp begins to deteriorate from the moment it is started, and the decline is accelerated as the lamp ages, one is faced with varying illuminating conditions. As the shutter opens and light is detected in the light path, the controller will electrically drive the lamp to a power which will produce a preset level of intensity (mW/cm^2) at the wafer plane.

During the interval while the shutter is closed, the lamp power will be returned to a value at or near its rating (Idle) for optimum life. It should be noted that lamp power in the constant intensity control mode may be dependent on the selected set value of intensity, the efficiency of the lamp and associated optical systems, and the age of the lamp.

There are limitations, however, as to the range that a lamp can be driven: too low and the arc will extinguish, while too high a value may result in an explosion of the bulb. These extremes are avoided by circuitry within the controller which sets upper and lower values of power that the unit will deliver.

3.2 Principles of Operation

The basic circuit of the Constant Intensity Controller (CIC) is a switching power regulator which is controlled by a lamp voltage-ampere servo loop. The reference for this loop may either be a fixed value (idle or constant power) or a value derived from the optical control loop (constant intensity). Switching semiconductors are MOS transistors which are operated at a rate of 40 kHz. The output transistors are isolated from the low level drive and control circuitry by means of a high speed optoisolator device.

3.2.1 Constant Power Control Loop

In addition to providing adequate output voltage stabilization against line voltage and load changes, the controller must provide immediate protection against overloads and equipment malfunction. Furthermore, a soft start is incorporated to prevent excessive inrush current due to the initial load capacitance. Figure 3-1 illustrates the principle control loop of the CIC.

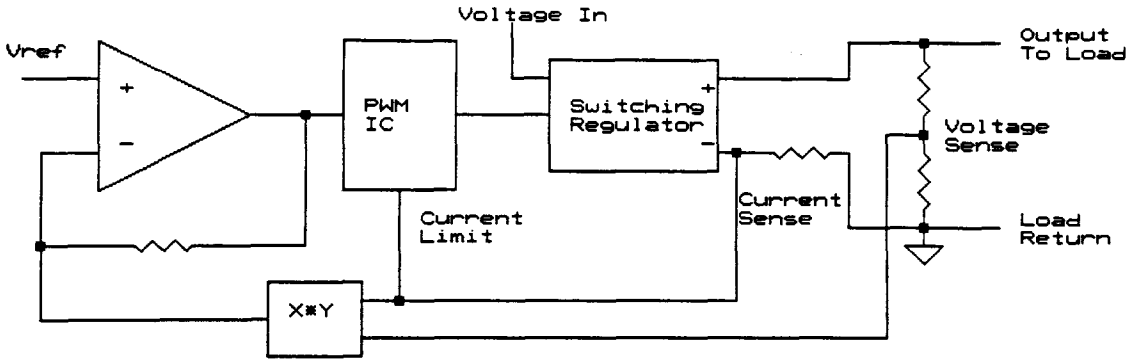

Figure 3-1 Block Diagram, Constant Power Control Loop

Both the output voltage and current to the lamp load are sensed. These signals are combined by means of a X-Y multiplier to produce a voltage proportional to the applied wattage. This signal is fed to the input of an error amplifier where it is compared with a reference voltage (V_{ref}) which is the desired power setting.

The output of this amplifier is connected to an input of the PWM IC. Another input of this modulator IC is used for a sawtooth oscillator signal. As a result of these two inputs, a rectangular waveform with the frequency of the oscillator emerges at the output of the PWM IC. The pulse-width of this waveform is determined by the output voltage of the error amplifier. Therefore, as the width of the pulse varies, the "on" time for the MOS transistor in the switching regulator will also vary and consequently the amount of energy taken from the input. Overvoltage and overcurrent protection is realized by circuit blocks which monitor these functions and activate appropriate inputs of the PWM and its associated output stage.

3.2.2 Optical Control Loop

Incident light energy is converted into a proportional electrical current by means of a silicon photodetector. This current in turn is changed into a more usable voltage function by a current to voltage circuit. Calibration gain is performed by the microprocessor so that the resulting voltage output is proportional to input current and modified only by the loop gain required to bring the circuit into calibration.

The intensity voltage from the current to voltage converter is supplied to the microprocessor input. The output of the microprocessor is fed to the control loop

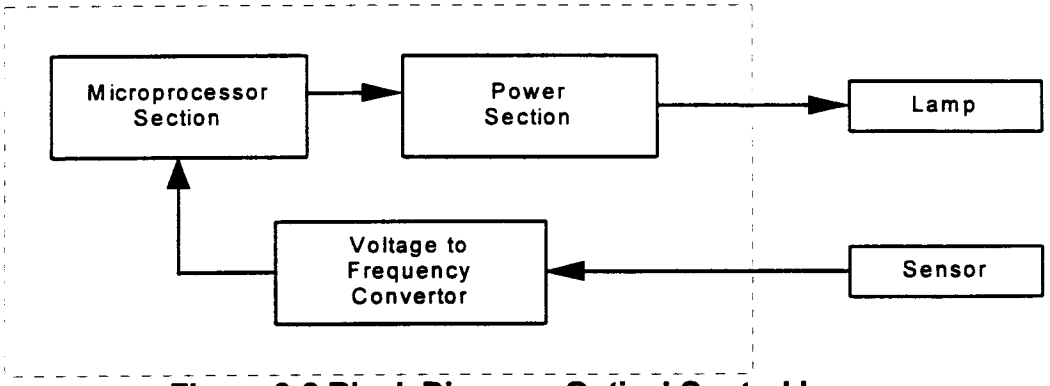

Figure 3-2 Block Diagram, Optical Control Loop

where it replaces the reference (Idle) voltage. When so connected, the action of the overall system servo loop causes the lamp to be driven to a level which will provide an intensity equal to the value set by the reference voltage.

3.2.3 Optical Sensor

The photosensors used in the dual sensor assemblies are selected silicon photodiodes with enhanced efficiencies in the UV spectrum; thin film dielectric or selected glass absorption filters are used. Each of the sensors has an adjustment to make it easier to optimize the sensor to the particular installation.

3.3 Technical Specifications

3.3.1 CIC 500 Constant Intensity Controller

Operating Mode: Constant Power
Independent dual channel constant intensity

Output: 500 watt maximum continuous
150 volts DC open circuit
10 amperes active current limit

Output Regulation: +/-1% over selected mains input range
(Electrical Power)

Lamp Ignition: 20 KV start with automatic shutdown following ignition. Active current limit during warmup. Remote start unit.

Lamp Options:

	350W Hg	200W Hg
Idle Power (W)	275	195
Max. Power (W)	400	260
Min. Power (W)	200	135
Max. Voltage (V)	80	75

Mains Input Options: 100-130 VAC 50/60 Hz
200-250 VAC 50/60 Hz

Optical Sensor: Dual channel using silicon photodiodes with thin film dielectric or selected glass absorption filters.

Optical Control: Autorange digital meter: 0 - 100 mW/cm^2
Front panel channel selection
Front panel level set and calibration

Size (w/o remote start unit): Depth: 419 mm (16.5 in)
Width: 260 mm (10.25 in)
Height: 152 mm (6.0 in)

Weight (w/o remote start unit): 8.0 kg(17.5 lbs)

3.3.2 CIC 1000 Constant Intensity Controller

Operating Mode: Constant power
Independent dual channel constant intensity

Output: 1200 watts maximum continuous
150 volts DC open circuit
10, 20 or 35 amperes active current limit depending on lamp selected

Output Regulation: (Electrical Power) +/-1% over selected mains input range

Lamp Ignition: 20 KV start with automatic shutdown following ignition. Active current limit during warmup. Remote start unit.

Lamp Option:

	1000W Hg	500W Hg-Xe	500W Hg	350W Cd-Xe	350W Hg	200W Hg
Idle Power:	900	475	475	275	275	195
Max Power:	1200	750	750	400	400	260
Min Power:	700	350	375	200	200	135
Max Voltage:	50	45	87	40	80	75

Mains Input Options: 200-250 VAC 50/60 Hz only

Optical Sensor: Dual channel using silicon photodiodes with thin film dielectric or selected glass absorption filters.

Optical Control: Autorange digital meter: 0-100mW/cm^2
Front panel channel selection
Front panel level set and calibration

Size (w/o remote start unit): Depth: 457 mm (18.0 in)
Width: 260 mm (10.25 in)
Height: 152 mm (6.0 in)

Weight (w/o remote start unit) 10 kg (22 lbs)

4. OPERATING PROCEDURES

The SUSS Constant Intensity Controllers (CIC 500 and CIC 1000) are designed to operate mercury, cadmium-xenon, and mercury-xenon short arc lamps.

CIC 500	CIC 1000
200 watt mercury	200 watt mercury
350 watt mercury	350 watt mercury
	350 watt cadmium-xenon
	500 watt mercury
	500 watt mercury-xenon
	1000 watt mercury

Table 4-1 CIC Lamp Types

The CIC has three different operator selectable exposure modes: CP, CI-1, and CI-2.

a. Constant power (CP): In this mode, the controller supplies the lamp with a set power level selected by the operator. No attempt is made to monitor lamp intensity and compensate for variations in lamp output.

b. Constant Intensity 1 (CI-1): In this mode, the controller monitors the lamp intensity measured by Channel 1 of the feedback sensor and varies the power supplied to the lamp to maintain the intensity selected by the operator.

c. Constant Intensity 2 (CI-2): Same as CI-1 but using Channel 2.

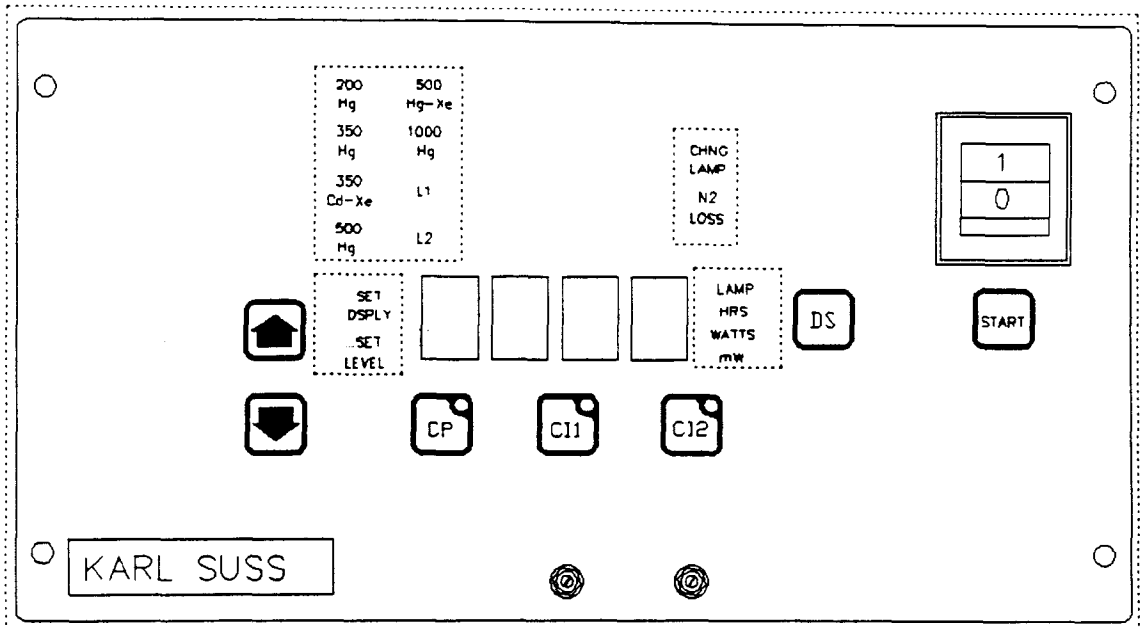

Figure 4-1 Front Panel Controls
(Areas in dashed lines are visible only when activated.)

4.1 Front Panel Controls and Functions (Ref.: Figure 4-1)

a. POWER Switch - The POWER switch applies main power to the CIC.

b. START membrane key pad - Momentarily pressing the START key when the display indicates "rdy" will commence the lamp ignition sequence. Pressing the START key at any other time has no effect.

c. DS (Display Select) membrane key pad - The DS key performs different functions depending upon whether the controller is operating in the CP or CI mode.

1. In CP mode, pressing DS key for less than 3 seconds:

The CI-1 key LED will flash.

The display will indicate mW/cm^2 and show the current optical power density being measured by Channel 1 of the sensor.

If the DS key is pressed again, the same sequence will take place for Channel 2. If the DS key is pressed for a third time, the display will revert to the original CP indication of Watts.

In CI-1 or CI-2 mode, pressing DS key for less than 3 seconds:

Display will alternate between an indication of Watts or mW/cm^2 for the channel (CI-1 or CI-2) in which the controller is operating.

2. **In all modes, including pre-ignition "rdy" state, pressing DS key for more than 3 but less than 5 seconds:**

   Pressing and holding the DS key for more than 3 but less than 5 seconds will cause the display to indicate total lamp hours. When lamp hours are being displayed, pressing the Down arrow will zero the lamp time counter. To exit from the lamp hours mode, press the DS key again to revert to the previous operating mode.

3. **In all modes, including pre-ignition "rdy" state, pressing DS key for more than 5 seconds:**

   Pressing and holding the DS key for more than 5 seconds will cause the display to indicate controller operating hours. The number which is shown on the display must be multiplied by ten (x10) to determine the total number of operating hours. To exit from the total unit hours mode, press the DS key again to revert to the previous operating mode.

d. CP (Constant Power) membrane key pad - The CP key performs several different functions as follows:

1. **Pressing CP key for less than 3 seconds:**

   Pressing and holding CP key for less than 3 seconds will cause the unit to go to the CP operating mode, and indicate watts on the display.

2. **Pressing CP key for more than 3 seconds:**

   Pressing and holding the CP key for more than 3 seconds will cause the SET LEVEL indicator to illuminate, and the arrow keys will be activated.

   By using the Up and Down arrow keys at this point, the operator can adjust the power supplied to the lamp to any value desired within the operating range of the lamp (specified in Section 3.3). When the desired value is reached, pressing the CP key again will cause the information to be stored.

e. CI-1 or CI-2 (Constant Intensity) membrane key pads - There are two independent constant intensity channels in the CIC with keys labeled CI-1 and CI-2. The function description applies to either channel.

1. Pressing a CI key for less than 3 seconds:

Pressing and holding a CI key for less than 3 seconds will cause the CIC to operate in the CI mode. The display will indicate mW/cm^2 for the channel selected. Power, in watts, can be displayed by pressing the DS key.

2. Pressing a CI key for more than 3 but less than 5 seconds:

Pressing and holding a CI key for more than 3 but less than 5 seconds will cause the SET LEVEL indicator to illuminate. The arrow keys will be activated, and the display will indicate in mW/cm^2.

By using the Up and Down arrow keys at this point, the operator can select the desired exposure intensity. When the desired value is reached, pressing the CI key again will cause the information to be stored.

3. Pressing CI key for more than 5 seconds:

Pressing and holding the CI key for more than 5 seconds will cause the SET DSPLY indicator to illuminate. The arrow keys will be activated, and the display will indicate in mW/cm^2.

At this point, the controller can be calibrated to an external UV power meter. Use the Up and Down arrow keys to change the CIC display to match the value indicated on the power meter. When the readings on the CIC display and the meter are the same, pressing the CI key again will cause the information to be stored.

Table 4-2 located at the end of this chapter is a condensed version of the operating instructions. After you have read the manual and understand the operation of the equipment, the chart is particularly helpful as a quick reference guide.

4.1.1 Selecting the Operating Configuration

The SUSS CIC Constant Intensity Controller is capable of operating only in constant power, or in operator selectable constant power or constant intensity. For proper operation in constant intensity, a SUSS optical sensor must be situated in the light path of the exposure optics of the mask aligner and attached to the rear of the controller.

1. **To select Constant Power (CP) only:**

   Press and hold the Up arrow and CP keys while applying main power. In this mode, the CIC will operate only in Constant Power; pressing the CI-1 or CI-2 keys will have no effect. When main power is applied, the display indicates "CP" for approximately one second and then commences the self test routine.

2. **To select Constant Intensity (CI)/Constant Power (CP):**

   Press and hold the Up arrow and CI-1 keys while applying main power; this will select Constant Intensity operation. In this configuration, the unit will operate in either Constant Power or Constant Intensity. After main power is applied, the display indicates "CI" for approximately one second and then commences the self test.

4.1.2 Lamp Selection

Pressing and holding the Down arrow and CI-2 keys while applying main power will activate the Lamp Selection subprogram. Subprogram operation is indicated when the display reads "bulb". By pressing the arrow keys, the unit will toggle among all applicable lamps, and the corresponding front panel annunciators will illuminate. When the desired lamp is indicated, pressing the CI-2 key again will start the self test procedure. All parameters corresponding to the lamp selected will be automatically loaded from memory into the operating system. Selecting either the 350W Cd-Xe or the 500W Hg-Xe lamps will not automatically switch the output power polarity unless your CIC supply has been modified by the supplier. If your power supply has been modified it will be indicated with an "X" on the Serial Number Tag located on the backpanel.

4.1.3 Display Test

Pressing and holding the Down arrow and the DS keys while applying main power activates the Display Test subprogram. For ten seconds, all applicable annunciators and display signals will illuminate and the alarm will pulsate. After ten seconds, the self test routine will commence automatically.

4.1.4 Standby

Pressing and holding the Down arrow key for more than three seconds while operating in the CP mode will cause the unit to revert to the standby mode. The lamp will be operated at Idle power and the CP LED will flash. To exit from the standby mode, press the CP, CI-1, or CI-2 key to select that particular operating mode.

4.1.5 Alarm

The CIC is equipped with an audible alarm to indicate abnormal operating conditions. A continuous tone is heard when either minimum or maximum lamp wattage is reached, lamp cooling interface has been activated, or when an over-temperature condition has occurred.

A pulsed tone is used as an audible indication of a key press.

4.1.6 Lamp Hours

In all modes, including pre-ignition "rdy" state, pressing and holding the DS key for more than 3 and less than 5 seconds will cause the display to indicate lamp hours. To reset this number press the down arrow. To exit from the total unit hours mode, press the DS key again to revert to the previous operating mode; if lamp is on, pressing CP, CI-1, or CI-2 keys will select that mode.

4.1.7 Total Operating Hours

In all modes, including pre-ignition "rdy" state, pressing and holding the DS key for more than 5 seconds will cause the display to indicate controller operation hours. The number which is shown on the display must be multiplied by ten (x10) to determine the total number of operating hours; this number cannot be reset except by a full reset. To exit from the total unit hours mode, press the DS key again to revert to the previous operating mode; if lamp is on, pressing CP, CI-1, or CI-2 keys will select that mode.

4.1.8 Full Reset

Under some circumstances it becomes necessary to delete the contents of the power supplies non-volatile memory. This procedure resets all presets in the power supply including lamp selection, lamp hours, total operating hours, and calibration data. To do a full reset, press the CI1 and CI2 buttons simultaneously and apply power. Hold CI1 and CI2 until the display reads Clr. Then press Start. The display will count down to 0 then place you in the Lamp selection mode (Section 4.1.2).

4.2 Rear Panel (Ref.: Figures 4-2 or 4-3)

The rear panel of the CIC contains all connections required to operate the controller. These include the Lamp Ignition Inhibit interface, the Lamp Cooling interface, the Main Power, the Optical Sensor, and the Remote Start Unit.

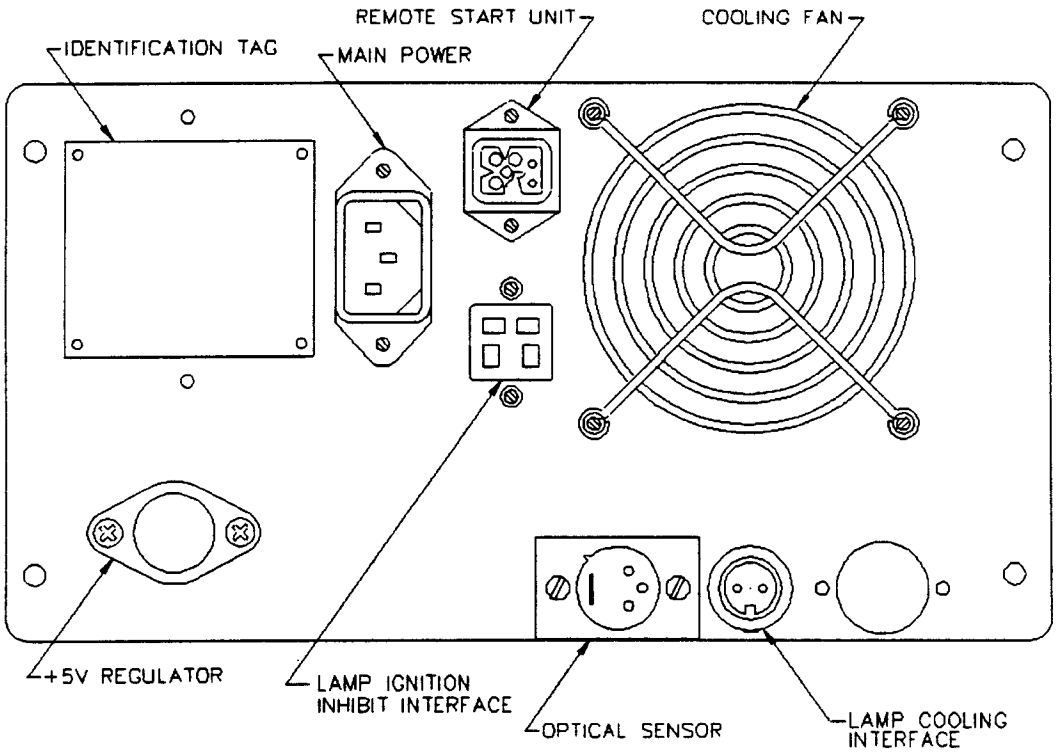

Figure 4-2 Rear Panel Connections - CIC 500

For the controller to operate properly, electrical connections must be made between pins 3 and 4 of the Lamp Ignition Inhibit, and pins 1 and 2 of the Lamp Cooling interfaces. These connections can be made with either the connectors and attached

jumpers which are supplied, or by connecting the controller to the appropriate areas of the mask aligner.

The rear panel of the unit also contains the cooling fan and a 5 volt regulator.

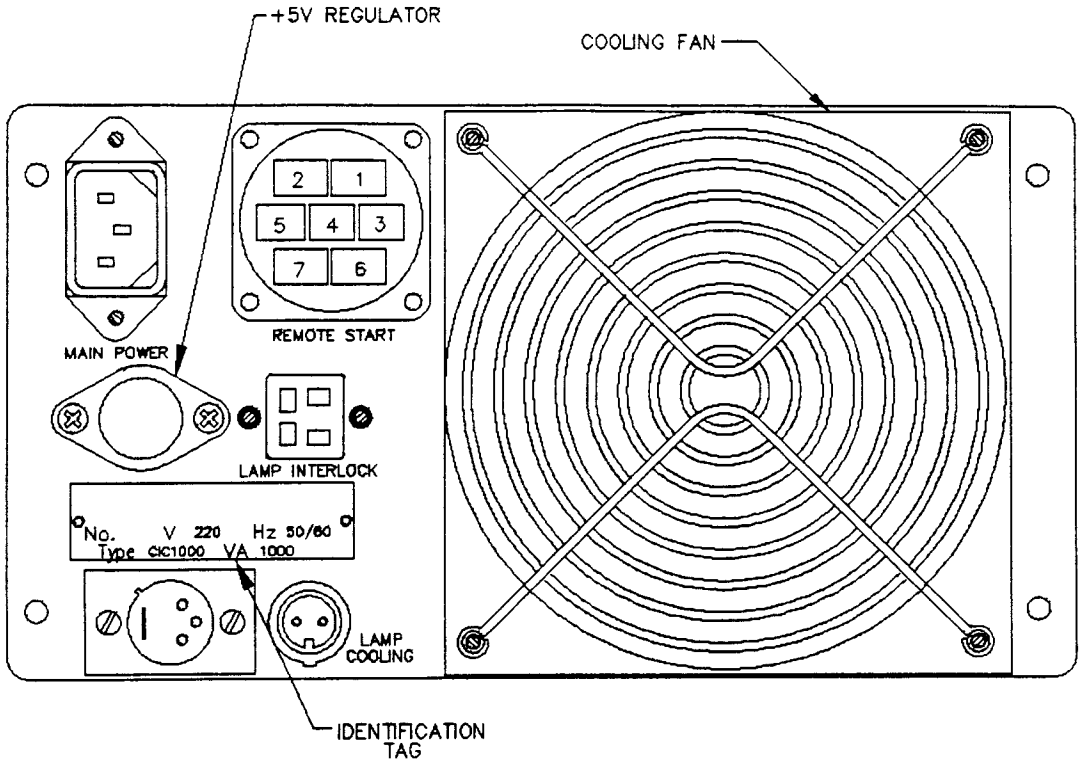

Figure 4-3 Rear Panel Connections - CIC 1000

4.3 Starting the Lamp

Make sure that the cables are properly connected to the remote start box as defined in Section 2.3 and that the proper power cord has been connected to the main power connector. Insure proper orientation of the lamp and start box lead wires. Refer to the table below for lamp polarity information. If operating parameters have been previously selected (lamp type, and operating mode; either constant power [CP] or constant intensity [CI]), then activate the POWER switch on the front panel. The CIC will commence the self test and the status annunciators describing the lamp selected will be illuminated. When the self test has been completed, the display will show "rdy". Press the START key momentarily; the display will indicate "fire" and the unit will try to ignite the lamp. It will continue trying to ignite the lamp up to nine times before resetting.

If the lamp does not ignite during the first sequence, check all connections and try again. You should allow at least one minute between ignition attempts. Failure to achieve lamp ignition after nine cycles usually means an old or defective bulb, or a problem in the wiring.

Once the lamp has been ignited, the high voltage start circuit will automatically shut down and the display will indicate "Cold" for about three minutes. This lets the lamp warm up properly before aligner exposures. After the warm-up sequence, the previous operating mode will be indicated by an LED illuminating on either CP, CI-1, or CI-2. The previous wattage will be displayed in the constant power mode, or if in constant intensity and no exposure is occurring, the idle wattage will be displayed. It is possible, though, that radiant output from the lamp may continue to increase even after the proper wattage has been achieved. This is quite normal due to the functional characteristics of the lamp. The lamp can be extinguished by using the power switch to remove main power from the controller.

4.4 Optical Sensor Gain Calibration

The optical sensor is typically located somewhere off axis in the exposure energy path. The sensor is designed to operate properly when it is exposed to only a portion of the energy level of the main beam. The following steps should be taken whenever a lamp is changed or lamp uniformity is adjusted.

1. Using the procedures described in Paragraph 4.1.d.2, set the CP level at maximum wattage minus ten watts. Be sure to press the CP key to store this value.
2. Press the up arrow to display the feedback frequency for channel 1.
3. Adjust the pot directly below the flashing LED for the maximum reading on the display. This value should be greater than 3000. If it isn't refer to your machine maintenance manual for the Sensor Adjustment Procedure and reduce the Channel 1 aperture.
4. Readjust until the display reads 60% ± 5% of the maximum value . Note reading as it will be used in step 6. Press the DS key and repeat 3 and 4 for channel 2.
5. Press the CP key and adjust the applied power level to 50W lower.
6. Press the up arrow to display the feedback frequency for channel 1 again. The frequency should have gone down. If it did not, repeat the calibration procedure. If the frequency doesn't change it indicates that the amplifier or sensor may be saturated which will prevent proper power regulation. Press the DS key and repeat for channel 2

4.5 Optical Calibration

For this discussion, we will assume that the lamp has started and has warmed up at least fifteen minutes to its Idle running temperature.

To obtain valid and repeatable results, it is necessary to use a calibrated UV power meter whose optical bandpass filters are identical (within the range of +/- 5 nm) to those of the optical sensor used with your controller. Therefore, we recommend that you use the Model 1000 Power Meter.

Optical calibration of the CIC is performed for both Constant Intensity 1 (CI-1) and Constant Intensity 2 (CI-2) channels. No optical calibration is required for Constant Power (CP) operation. This series of steps is call the **Set Display** routine.

1. Perform the procedures in Section 4.4 to check for sensor saturation whenever the exposure lamp position is changed or any optical components are moved or exchanged.
2. Select the channel to be calibrated (either CI-1 or CI-2).
3. Place the UV power meter probe which corresponds to the channel being calibrated on the exposure chuck or mask holder of the mask aligner.
4. Open the light housing shutter so that light is incident on the probe. Note the value indicated on the power meter.
5. Press and hold the CI key of the channel that you have selected until the display flashes and the SET DSPLY annunciator is illuminated. At this point, you have entered the Set Display subprogram.
6. Using the arrow keys, adjust the CIC display to match the display on the power meter. You have now calibrated the display section of the unit to correctly indicate exposure lamp intensity at the exposure point.

The next series of steps, called the **Set Level** routine, adjusts the unit to provide the intensity you desire.

1. Press and hold the CI key until the SET LEVEL annunciator is illuminated. Again, the arrow keys will be activated.
2. The CIC has internally set maximum and minimum wattage ranges to power any selected lamp. Use the arrow keys to select an intensity between the upper and lower limits.

3. Press the CI key again to revert to a normal operating mode after you have selected your desired exposure intensity.

   When selecting an exposure intensity, keep in mind that the closer the lamp is operated to its maximum limit, the shorter the lifetime of the lamp. After you have selected the desired exposure intensity, it is always a good idea to go back to the Set Display subprogram and recheck the calibration. If necessary, readjust the CIC display to match that of the power meter; also, readjust the intensity level.

4. When this procedure has been completed for CI-1, repeat the steps for CI-2.

4.6 System Checkout

After optical calibration, you may want to verify the upper and lower power limits to which a lamp can be driven.

1. Press and hold one of the CI keys until the SET LEVEL annunciator is illuminated.
2. Press the Down arrow key while watching both the CIC and power meter displays. Both displays should track within +/- 10%.
3. Continue pressing the key until the minimum achievable power level has been reached. When the display stops decreasing and the alarm sounds, it indicates the lowest electrical power at which the lamp can be driven.
4. Now press and hold the Up arrow key. The CIC and power meter displays should track as power to the lamp is increased, thereby increasing the intensity.
   Continued pressing of the Up arrow key will result in an audible alarm, indicating that the maximum achievable power level has been reached.
5. Press and hold the Down arrow key to return to the desired exposure intensity. The audible alarm will cease and power to the lamp will be reduced.
6. Close the shutter on the aligner. The intensity should drop to 0.0, and the lamp power should return to its Idle value.

Table 4-2 Condensed Operating Instructions

Function	Sequence of Operation						
	Press Membrane Key Pad	**For Time In Seconds**	**Using Key**	**Display Shows**	**To Store**	**To Reset**	**Additional Comments**
Setting Power CP	CP	T>3	↑ or ↓	SET LEVEL	CP		
Calibration CI1 or CI2							
Set Display	CI1 or CI2	T>5	↑ or ↓	SET DSPLY	CI1 or CI2		
Set Level	CI1 or CI2	3<T<5	↑ or ↓	SET LEVEL	CI1 or CI2		
Display Configuration							
In CP Mode:							
Display Watts	CP	T<3		WATT			
Display mW/cm^2 CI1	CP,DS	T<3		mW/cm^2			CI1 Flashes
Display mW/cm^2 CI2	CP,DS,DS	T<3		mW/cm^2			CI2 Flashes
In CI Mode:							
Display Watts	DS	T<3		WATT			
Display mW/cm^2 CI1	CI1	T<3		mW/cm^2			
Display mW/cm^2 CI2	CI2	T<3		mW/cm^2			
Total Lamp Hours	DS	3<T<5				↓	Selected after RDY
Total Operating Hours	DS	T>5					Selected after RDY; Multiply by 10
Configure to CP Mode	↑+CP+Power						Pressing CI1 or CI2 has no effect
Configure to CI Mode	↑+CI1+Power						
Display Test	↓+DS+Power						
Lamp Selection	↓+CI2+Power		↑ or ↓		CI2		
Standby (CP Mode Only)	↓	T>3				CP	Power supply must be in CP mode. Lamp goes to idle power and CP light flashes.
Display Frequency	↑	T>3					Used in Calibration Procedure
Full Reset	CI1+CI2+Power						

5. QUALITY STANDARDS

This chapter briefly describes some of the quality standards which we recommend you follow to help you obtain the best possible results from your SUSS equipment. Karl Suss manufactures precision instruments that cannot be expected to function properly unless they are correctly adjusted and maintained, and precautions are taken to ensure a clean environment.

We assume that you have a comprehensive quality control program which has been developed to suit your particular applications. These comments are only intended as a reminder that quality standards are an essential part of good business practice.

5.1 Equipment Checks and Adjustments

The unit should be checked on a regular basis to make sure that it is still adjusted to optimum performance conditions.

5.1.1 Lamp Intensity

Output intensity from a short arc lamp will vary in direct proportion to the lamp input power. This input power, however, is limited by the physical characteristics of the lamp in operation. The efficiency of the lamp housing will also contribute to the actual amount of energy density which will be available. Considering these factors, it is apparent that both a maximum and a minimum amount of light intensity will exist for any set of conditions - lamp size, lamp housing, and required lamp safety limits.

In general, the higher the power at which the lamp is driven, the shorter the useful life of the lamp; "useful life" in this case is defined as the time required for the initial intensity to decay 50%. For optimum performance, the exposure intensity should be set at or below the value measured at Idle power. If you require a higher intensity, you should be aware of the tradeoffs involved.

5.1.2 Light Uniformity

Proper light uniformity is required for repeatability of exposure; tests and adjustments should be done periodically. Refer to the mask aligner manual for instructions on how to perform uniformity tests correctly.

6. MAINTENANCE AND SERVICE

This chapter describes the self test features, presents a comprehensive Troubleshooting Guide, gives step-by-step instructions on how to replace fuses and change main power, and provides guidance on how to receive further technical assistance.

6.1 Self Test Failure Conditions

The CIC power supply displays its model number and revision then performs a series of tests of the major functional sections of the unit every time the main power is applied. These tests are called Test 1, Test 2, and Test 3. If the CIC passes all three tests, the display indicates "rdy" (Ready), and the START key is enabled.

Test 1: Writes a sequence of test data to the RAM and then reads that information back. If the read data does not correlate with the written data, the test sequence terminates and the lamp ignition is inhibited and the display alternates between "Fail" and "C 01".

Test 2: Checks the unit's EEPROM where the following operational parameters have been stored - lamp type, previous operating mode, set point, display scaling, unit hours, and lamp hours. Test 2 is divided into four individual tests. (Refer to Section 6.2 for specific details.) If the unit fails Test 2, lamp ignition is inhibited and the display alternates between "Fail" and "C 02", “C2.1”,”C2.2”,or “C2.3”.

Test 3: Performs a check of the power section. Soft start of the power components is initiated and the detection circuitry for the voltage and current inputs is checked. If this test fails, lamp ignition is inhibited and the display alternates between "Fail" and "C 03".

6.2 Troubleshooting Guide

Symptom	Corrective Action
Display alternates between "Fail" and "C 01"	RAM failure. Refer to Sec. 6.4 on how to receive technical assistance
Display alternates between "Fail" and "C 2.1"	EEPROM Data Error. Press Up arrow to continue test. Re-enter either CP or CI exposure mode after lamp ignition
Display alternates between "Fail" and "C 2.2"	EEPROM Data Error. Press Up arrow to continue test. Re-enter either CP or CI operating mode; re-enter SET LEVEL parameters after lamp ignition (Ref.: Section 4.5)
Display alternates between "Fail" and "C 2.3"	EEPROM Data Error. Press Up arrow to continue test. Re-enter either CP or CI operating mode; re-enter SET LEVEL and SET DSPLY parameters after lamp ignition (Ref.: Section 4.5)
Display alternates between "Fail" and "C 02"	EEPROM failure. Ref. Section 4.1.8 for Full Reset Procedure
Display alternates between "Fail" and "C 03"	Power section failure. Refer to Section 6.4 on how to receive technical assistance
Display alternates between "Fail" and "C 04"	Microprocessor failure. Replace 8031 microprocessor with 8032.
No display	Bad fuse(s). Unplug supply from start box and line power, remove top cover and check fuses F1-F3. Replace if necessary. See Table 6.1 for fuse ratings.

Symptom	Corrective Action
Lamp will not start	a. Connections between start box and lamp are loose, shorted, or have developed high resistance contact; check all connections, especially those within the lamp housing. b. Connections between controller and start box are loose, shorted, or have developed ohmic contacts; check all connections at the back of the controller. c. Start interlock activated; refer to Section 4.2.
"Chng Lamp" annunciator illuminates	Aged lamp causes overvoltage trip, Replace lamp.
Lamp starts but controller shuts down after short time	a. Lamp has been installed in reverse which results in rapid gap erosion; replace with new lamp and install correctly. b. Bad contacts in lamp housing; clean and check all connections. c. Defective lamp; replace. d. No cooling; N2 loss.
Lamp intensity is low or unresponsive to changes in the Set Level.	a. Lamp is overcooled; refer to Section 3.1.1 and reduce N2 flow past lamp b. Lamp has developed a leak; replace. c. Lamp reflective band has deteriorated due to age; replace lamp.
Lamp intensity is low, but not over-cooled	a. Improper alignment in lamp housing. b. Aged lamp with metal deposits on inside of bulb; replace. c. Lens and mirror optical coatings deteriorated; replace.

Symptom	Corrective Action
Intensity display on control does not agree with external power meter	a. Measurement with external power meter made at two different points in light beam. b. Measurement with external power meter made with probe where spectral response differs from that of the controller. c. Change in optical properties or alignment of optical elements; recalibrate system. d. Incorrect calibration during original settings. e. Control settings of controller have been changed since original calibration. f. Insufficient incident light on optical sensor.
Intensity will not maintain present level in control	a. Optical sensor not installed. b. Defective optical sensor assembly. c. No light on optical sensor.
mW/cm^2 display indicates no response	a. Optical sensor not installed. b. Defective sensor assembly. c. No light on optical sensor.
Will not maintain correct Idle power	a. Lamp is overcooled; refer to Section 3.1.1 and reduce N2 flow past lamp. b. Defective lamp; replace. c. Bad contacts in lamp housing; clean and check all connections.
"N2 Loss" annunciator illuminated	a. Lamp cooling interface connector/ connection missing. b. Low/no lamp cooling.

6.3 Main Power Selection

The SUSS CIC units are designed to operate applicable lamps over a wide range of main input voltage. The CIC 500 can be ordered in either a 110V or 220V configuration; the voltage switch is set at the factory as specified in the purchase order. The CIC 1000 however, is supplied only in the 220V configuration. Fuses used are based on the input voltage for the supply. For fuse ratings refer to the following table.

Fuse	CIC 500, 110V	CIC 500 220V	CIC 1000, 220V
F1/F2	3AG .25X1.25" 7A SLO-BLO 610FS011	3AG .25X1.25" 5A SLO-BLO 610FS009	3AG .25X1.25" 15A SLO-BLO 610FS013
F3	DIN 41571 0.5A SLO-BLO 61008796	DIN 41571 0.5A SLO-BLO 61008796	DIN 41571 0.5A SLO-BLO 61008796

Table 6-1 CIC Power Supply Fuses

6.4 Service Information

6.4.1 Technical Assistance

Should difficulties arise with the use or operation of your Constant Intensity Controller, and you are unable to resolve the problem by using the Troubleshooting Guide, you can receive further assistance as follows:

U.S., Canada, and Mexico - Call Customer Service at 802-244-7884 during normal working hours, Eastern time, or your regional Karl Suss office.

International - The Karl Suss office which processed your order or is currently handling your account can give you specific instructions on whom to contact to get additional help or answer any questions.

6.4.2 Factory Repairs

U.S., Canada, and Mexico

1. Call Customer Service at 802-244-7884 during normal working hours, Eastern time, or your regional Karl Suss office.

2. Be prepared to furnish the following information (if available):

   a. Your company name, address, telephone number, and the name of the responsible individual whom we may contact if we have technical questions about the problem.
   b. Model and serial number of the equipment.
   c. A list of associated equipment and a description of the electrical connections.
   d. A brief description of the problem.

3. Customer Service will provide you with an MRA (Material Return Authorization) number and instructions on where to ship the equipment. The MRA number must be shown on the outside of the return shipping container, preferably on the return label.

4. The repair charges for units not covered under warranty will be billed in accordance with the published prices in effect; a purchase order should be issued by your organization to cover the cost of repairs.

International

The Karl Suss office which processed your original order or is currently handling your account can give you specific instructions on how to proceed to have your unit repaired

.

7. WARRANTY AND LIMITATIONS

In most cases, Karl Suss products are covered by a warranty which includes labor, material, and workmanship. The warranties vary depending upon the type of equipment and the area of the world where the equipment is located. Please consult the specific warranty terms outlined in your quotation for the particulars which pertain to your machine.

7.1 Scope

This warranty covers all defects in material and workmanship on Karl Suss products except as specified below:

1. Batteries
2. Voltage **conversions**
3. Periodic checkups which do not disclose any defects covered by the warranty.
4. Units on which the serial number has been defaced, modified, or removed.
5. Damage or deterioration:
   a. Occurring to any external cabinet or case.
   b. Resulting from accident, misuse, abuse, neglect, unauthorized product modification, or failure to follow the instructions in the Operator's Manual.
   c. Resulting from repair or attempted repair by anyone not specifically authorized by Karl Suss.
   d. Resulting from installation of parts or accessories that do not conform to the quality or specifications of the original parts or accessories.
   e. Occurring during shipment. (Claims must be presented to the carrier or as determined by local practice.)

Karl Suss will pay for all labor and material costs to repair items under warranty except for shipping charges which are discussed in greater detail in Section 7.3.

All implied warranties, including warranties of merchantability and fitness for a particular purpose are limited in duration to the length of this warranty, unless otherwise provided by state law.

The liability of Karl Suss is limited to the repair or replacement, at our option, of any defective product and shall in no event include incidental or consequential commercial damages of any kind.

7.2 Who is Protected

This warranty is offered only to the original purchaser of the equipment.

7.3 How to Receive Warranty Service

U.S., Canada, and Mexico

1. Call Customer Service at 802-244-7884 during normal working hours, Eastern time, or your regional Karl Suss office.

2. Be prepared to furnish the following information (if available):

   a. Your company name, address, and telephone number with the name and telephone number of the individual whom we may contact for further technical information regarding the problem if necessary.
   b. Model and serial number of the equipment.
   c. A description of the electrical connections to associated equipment and a list of this equipment.
   d. A brief description of the problem.

3. Customer Service will provide you with a MRA (Material Return Authorization) number and instructions on where to ship the equipment. The MRA number must be shown on the outside of the return shipping container, preferably on the return label. It is important to remember that a unit will not be accepted for repair unless an MRA has been issued.

4. Although you must pay the shipping charges if it is necessary to send the equipment to us, we will pay the return shipping charges if the product is covered under warranty.

International

The Karl Suss office which processed your original order or currently handles you account can give you specific instructions about how to obtain warranty service.

SUSS MJB 3

MASK ALIGNER

Parts Identification Manual

SECTION	ASSEMBLY
1.0	MANIPULATOR
2.0	STAGE
3.0	FRONT PANELS
4.0	DAMPER SLIDE
5.0	MOUNTING PLATE
6.0	MIRRORHOUSE PISTON
7.0	LAMPHOUSE ASSEMBLY
8.0	LAMPHOUSE TOP

This Manual is subject to review and/or revision without notice.

P/N 080AA002
1087

LIST OF REVISIONS

REVISION #	CHANGE	DATE
	ORIGINAL DOCUMENT	11/87

RECOMMENDED REPLACEMENT PARTS FOR MJB 3 MASK ALIGNER

Fuses:

PN: 61008796	0.5 Amp
PN: 61004464	1.6 Amp
PN: 61004405	2.5 Amp
PN: 61004499	6.3 Amp
PN: 61004448	1.0 Amp

Use only OEM fuses; check fuse holder for proper size.

Mechanical Relay:

PN: 61001902

Pneumatic Valves:	**# on Valve**
PN: 61501409	K 65.115
PN: 61501417	K 65.111
PN: 61500356	K 65.127

The pneumatic valves on the MJB 3 have a valve number on the side of the valve. Match this number to the appropriate part number to order the correct valve.

Lamps:

PN: 61000094	200 Watt Hg Lamp
PN: 61000078	350 Watt Hg Lamp
PN: 610L0003	500 Watt HgXe Lamp
PN: 610L0001	350 Watt CdXe Lamp

Microscope Lamps:

PN: 61007064	6V 5 Watt (Plugs into MJB 3)
or	or
PN: 61000264	6V 15 Watt (Has separate Illumination Control Box)

Microscope Lamp, Splitfield and Turret:

PN: 61000256	20 Watt
PN: 61028908	85 Watt

IR Illumination Lamp:

PN: 61000256

Lamphouse:

PN: 26001055	Cathode Shielded Cable, 350 Watt
PN: 260WI001	Anode Wire, 350 Watt
PN: 26001101	Lamp Wire, 200 Watt

HOW TO ORDER REPLACEMENT PARTS

If you wish to place an order for replacement parts, we suggest that you follow this procedure to ensure that the proper parts are shipped to you.

1. Call Customer Service during normal working hours at the location nearest to you:

   East Coast (Vermont) 802-244-7884

   West Coast (California) 714-660-0100

2. Be prepared to furnish the following information as appropriate:

   a. Model/type and serial number of the machine.

   b. Item number, description, and part number. It will be helpful if you supply the page number (in this manual) and the assembly number when placing your order.

   c. Whether lamphouse is 200W or 350W.

   d. Purchase order number.

   e. Name and telephone number or extension of the individual whom we may contact if necessary for technical information regarding the part(s).

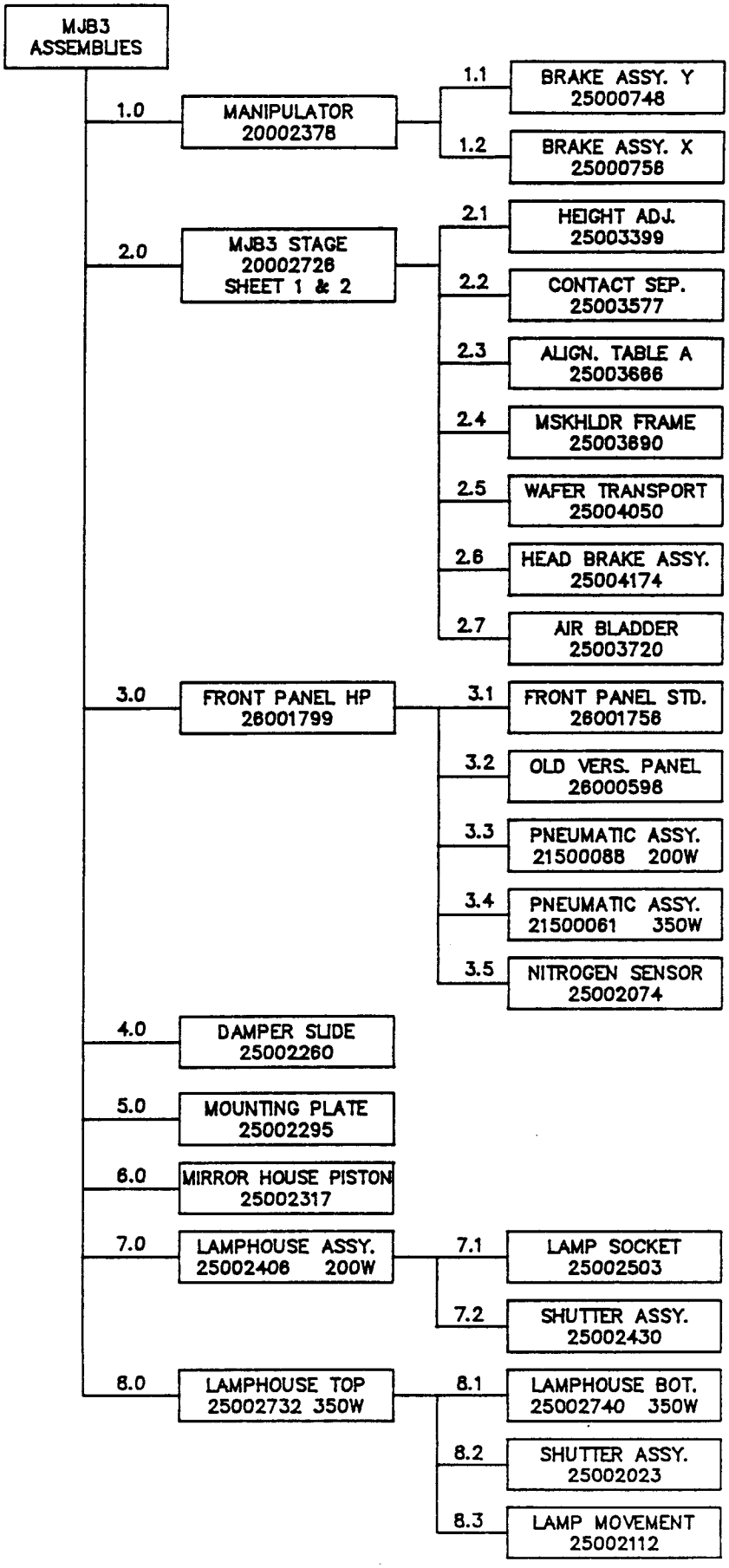
MJB3 ASSEMBLIES
1.0
MANIPULATOR 20002378
1.1
BRAKE ASSY. Y 25000748
1.2
BRAKE ASSY. X 25000758
2.0
MJB3 STAGE 20002726 SHEET 1 & 2
2.1
HEIGHT ADJ. 25003399
2.2
CONTACT SEP. 25003577
2.3
ALIGN. TABLE A 25003666
2.4
MSKHLDR FRAME 25003690
2.5
WAFER TRANSPORT 25004050
2.6
HEAD BRAKE ASSY. 25004174
2.7
AIR BLADDER 25003720
3.0
FRONT PANEL HP 26001799
3.1
FRONT PANEL STD. 26001758
3.2
OLD VERS. PANEL 26000598
3.3
PNEUMATIC ASSY. 21500088 200W
3.4
PNEUMATIC ASSY. 21500061 350W
3.5
NITROGEN SENSOR 25002074
4.0
DAMPER SLIDE 25002260
5.0
MOUNTING PLATE 25002295
6.0
MIRROR HOUSE PISTON 25002317
7.0
LAMPHOUSE ASSY. 25002406 200W
7.1
LAMP SOCKET 25002503
7.2
SHUTTER ASSY. 25002430
8.0
LAMPHOUSE TOP 25002732 350W
8.1
LAMPHOUSE BOT. 25002740 350W
8.2
SHUTTER ASSY. 25002023
8.3
LAMP MOVEMENT 25002112

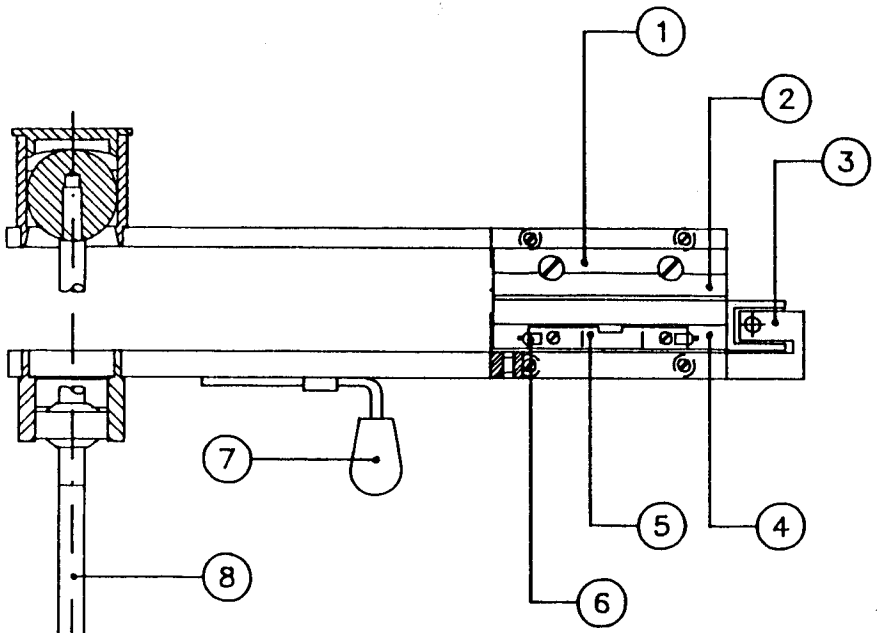

EARLY VERSION MANIPULATOR HANDLE

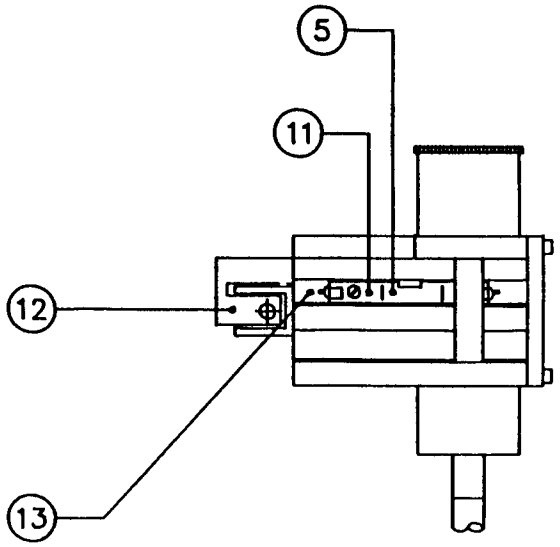

NO.	PART NUMBER	DESCRIPTION
1	30003369	TOP PLATE
2	30003199	MOUNTING PLATE
3	SEE DWG. NO. 25000748	
4	30003210	BALL SLIDE RIGHT
5	30003172	MIDDLE BEARING PLATE
6	30003458 (4x)	BALL GUIDE
	72500581 (28x)	6mmø BALL BEARINGS
7	61001031	PLUG
8	30003318	MANIPULATOR ARM
9	61000523 (2x)	SWITCH
10	30003466	HANDLE COVER
11	30003474 (2x)	BALL BEARING STOP
12	SEE DWG. NO. 25000756	
13	30003202	BALL SLIDE LEFT
14	61005991	SWITCH
15	445-5.92	BUTTON

KARL SUSS		Pg. 1.0
MANIPULATOR		
DWG. NO.: 20002378	REV. 00	

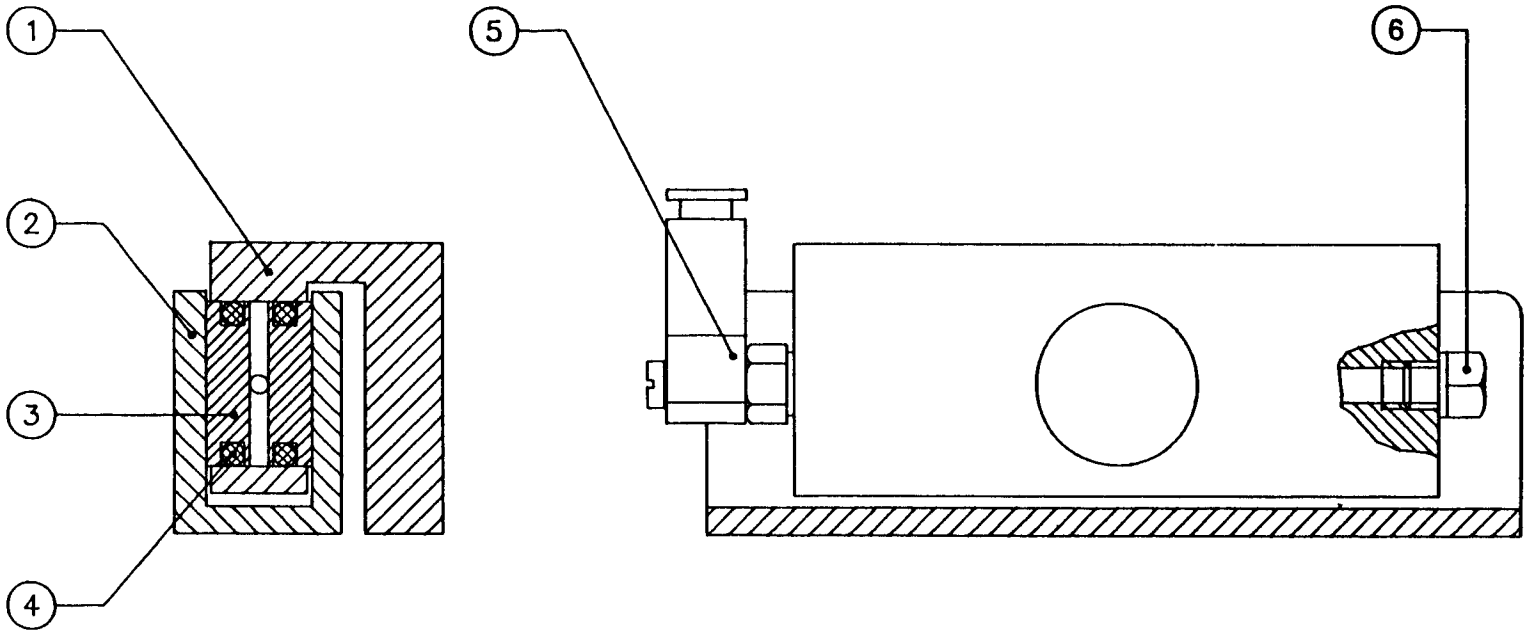

NO.	PART NUMBER	DESCRIPTION
1	30003148	BRAKE HOLDER
2	30003555	BRAKE RAIL
3	30003156 (2x)	BRAKE BOLT
4	70500088 (2x)	O RING
5	61500232	FITTING
6	61500135	PLUG

KARL SUSS	
BRAKE Y-AXIS	
DWG. NO.: 25000748	REV. 00

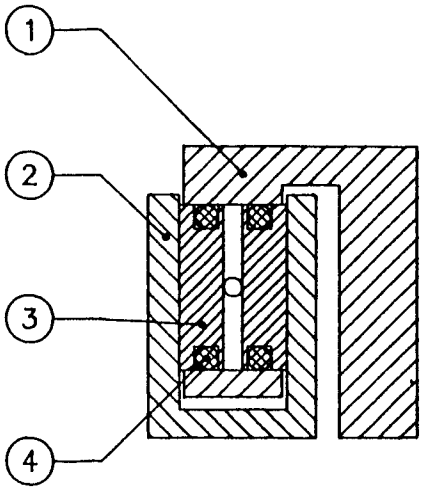

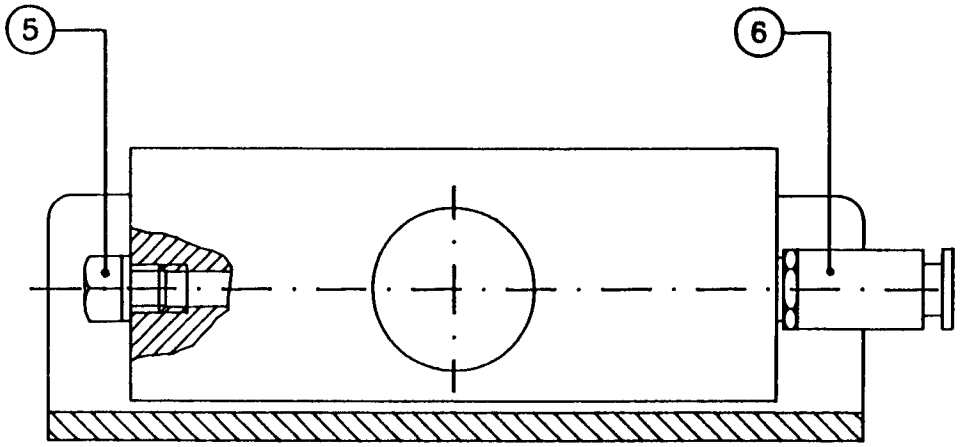

NO.	PART NUMBER	DESCRIPTION
1	30003148	BRAKE HOLDER
2	30003555	BRAKE RAIL
3	30003156 (2x)	BRAKE BOLT
4	70500088 (2x)	O RING
5	61500135	PLUG
6	61500372	ST. FITTING

KARL SUSS	
BRAKE X-AXIS	
DWG. NO.: 25000756	REV. 00

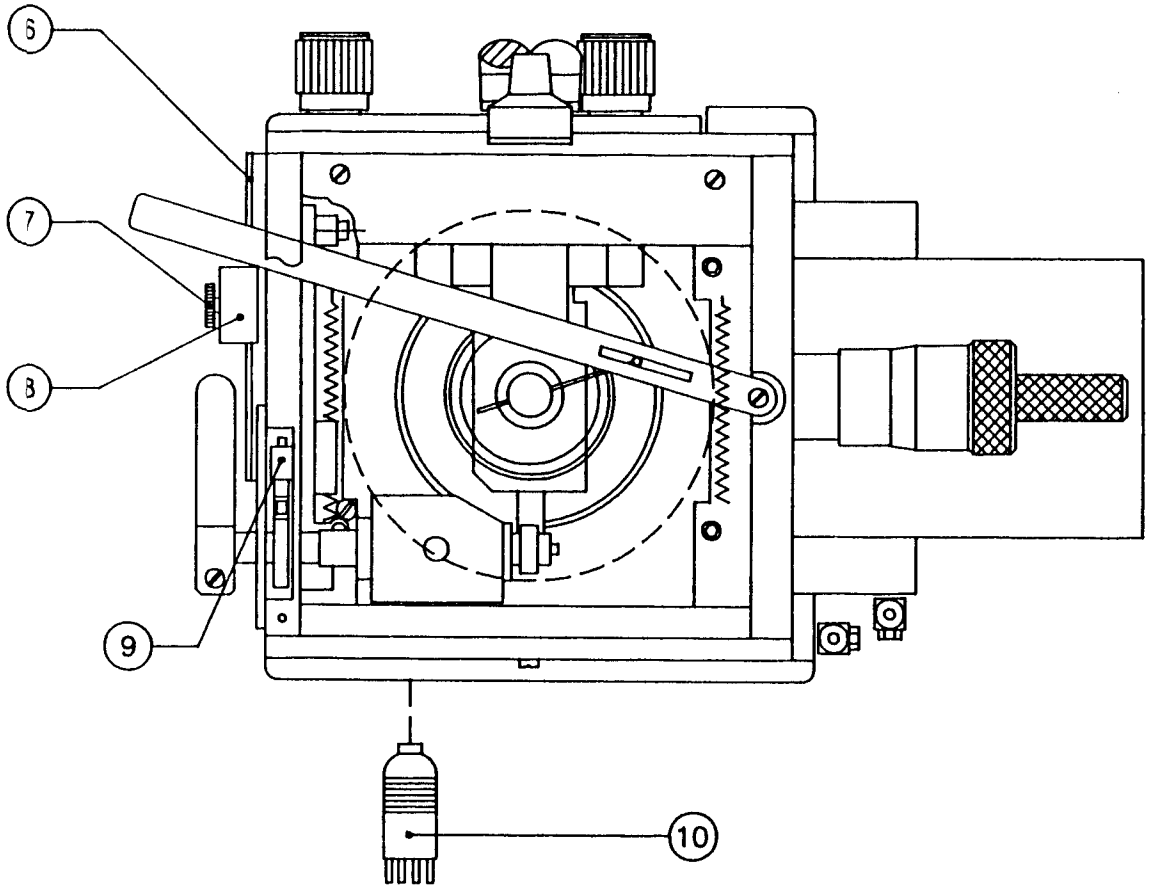

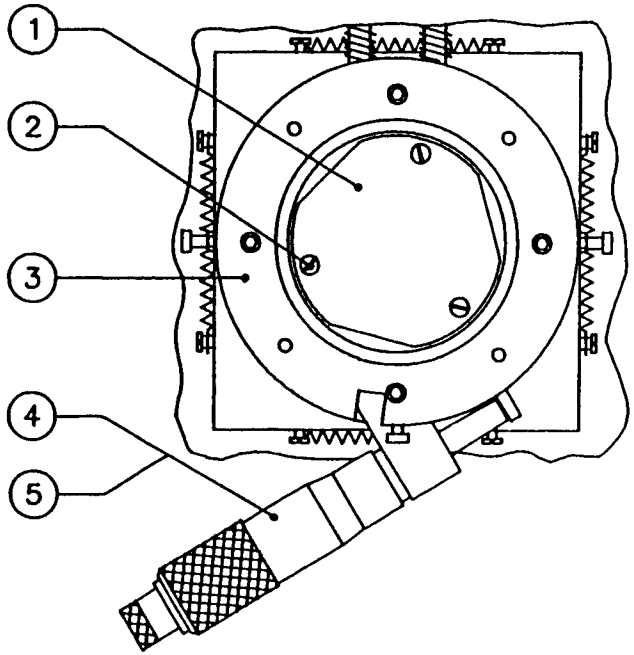

NO.	PART NUMBER	DESCRIPTION
1	30026636	CHUCK MOUNTING PLATE
2	30026709 (3x)	CHUCK LEVELING SCREW
3	30026628	OUTER RING
4	60001194	STANDARD MICROMETER
5	60001208	HP MICROMETER
6	30020468	ADJUSTING ARM
7	74000098	SCREW
8	30020476	GUIDE
9	61006343	SWITCH (SEE NOTE)
10	61004332	PLUG

NOTE:
61005983 SWITCH MAY BE USED IN THIS POSITION ALSO. BLUE COLOR SWITCH IS PART NO. 61006343.

KARL SUSS		
STAGE		
DWG. NO.: 25002726 SHEET 1 OF 2	REV. 00	Pg. 2.0

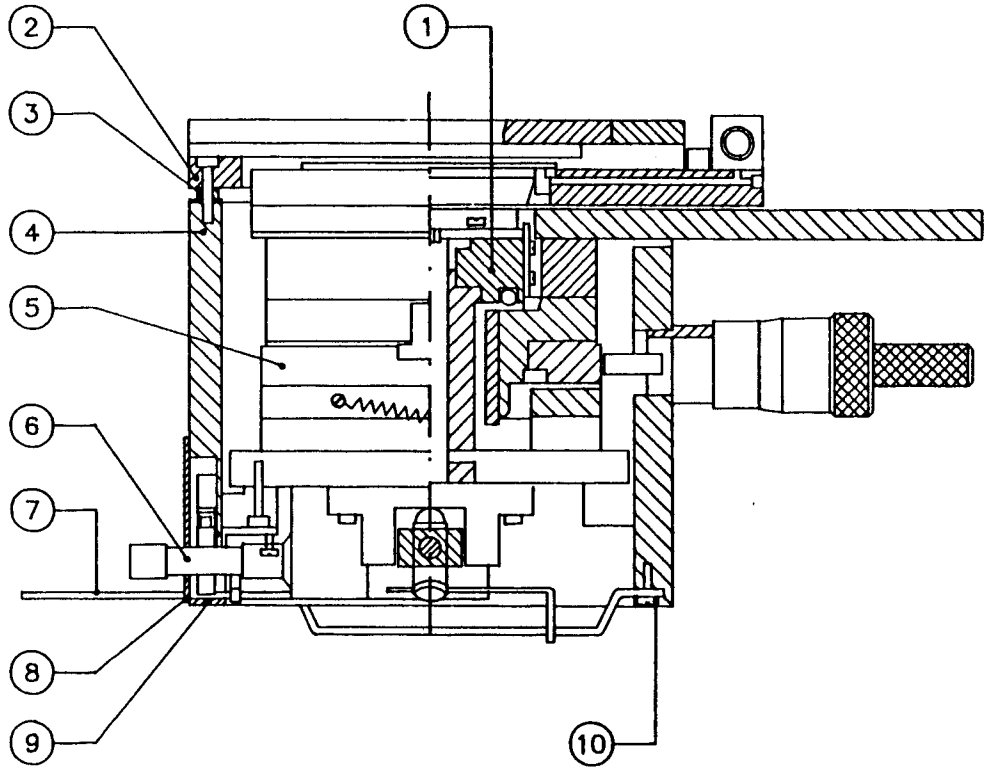

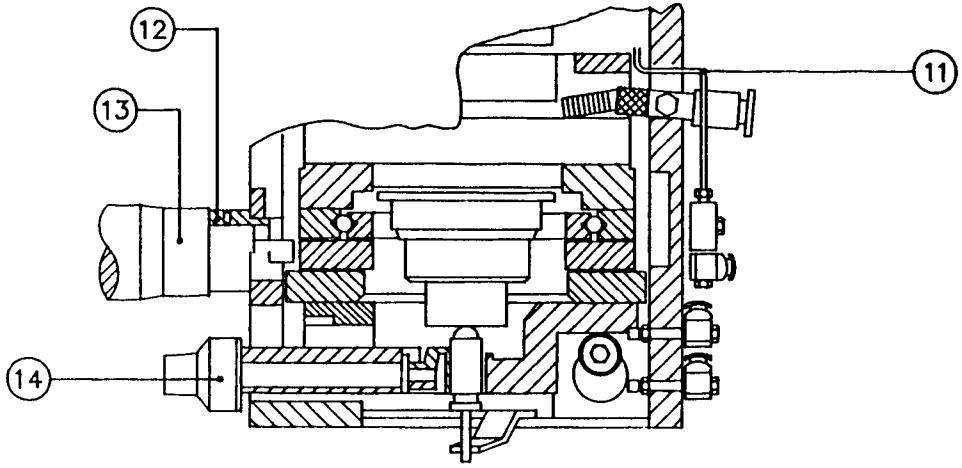

NO.	PART NUMBER	DESCRIPTION
1	SEE DWG. NO. 25004174	
2	SEE DWG. NO. 25003690	
3	30029759 (4x)	SPACER
4	01000594	FRAME
5	SEE DWG. NO. 25003666	
6	SEE DWG. NO. 25003577	
7	30030498	LEVER
8	30033691	COVER
9	30037395	SUPPORT
10	30042437	SHOULDER SCREW
11	61502154	HOSE
12	30009626	HOLDER
13	60002220	MICROMETER
14	SEE DWG. NO. 25003399	

KARL SUSS		
STAGE		
DWG. NO.: 20002726 SHEET 2 OF 2	REV. 00	Pg. 2.0

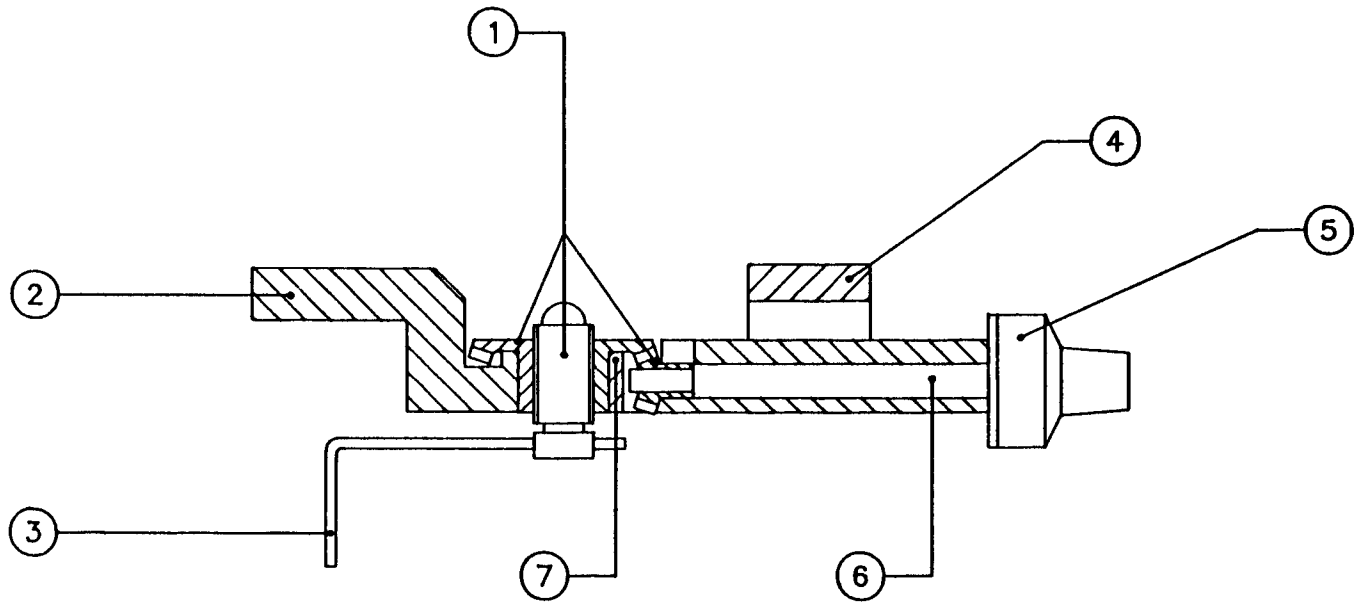

NO.	PART NUMBER	DESCRIPTION
1	01004220	COARSE BOLT, LARGE & SMALL GEAR
2	30029678	MOUNTING BRACKET
3	30020409	SEPERATION ROD
4	30029686	BRACKET
5	30029635	HEIGHT ADJUSTMENT KNOB
6	30029651	SHAFT
7	73501425 (2x)	SHIM WASHER

KARL SUSS	
HEIGHT ADJUSTER	
DWG. NO.: 25003399	REV. 00

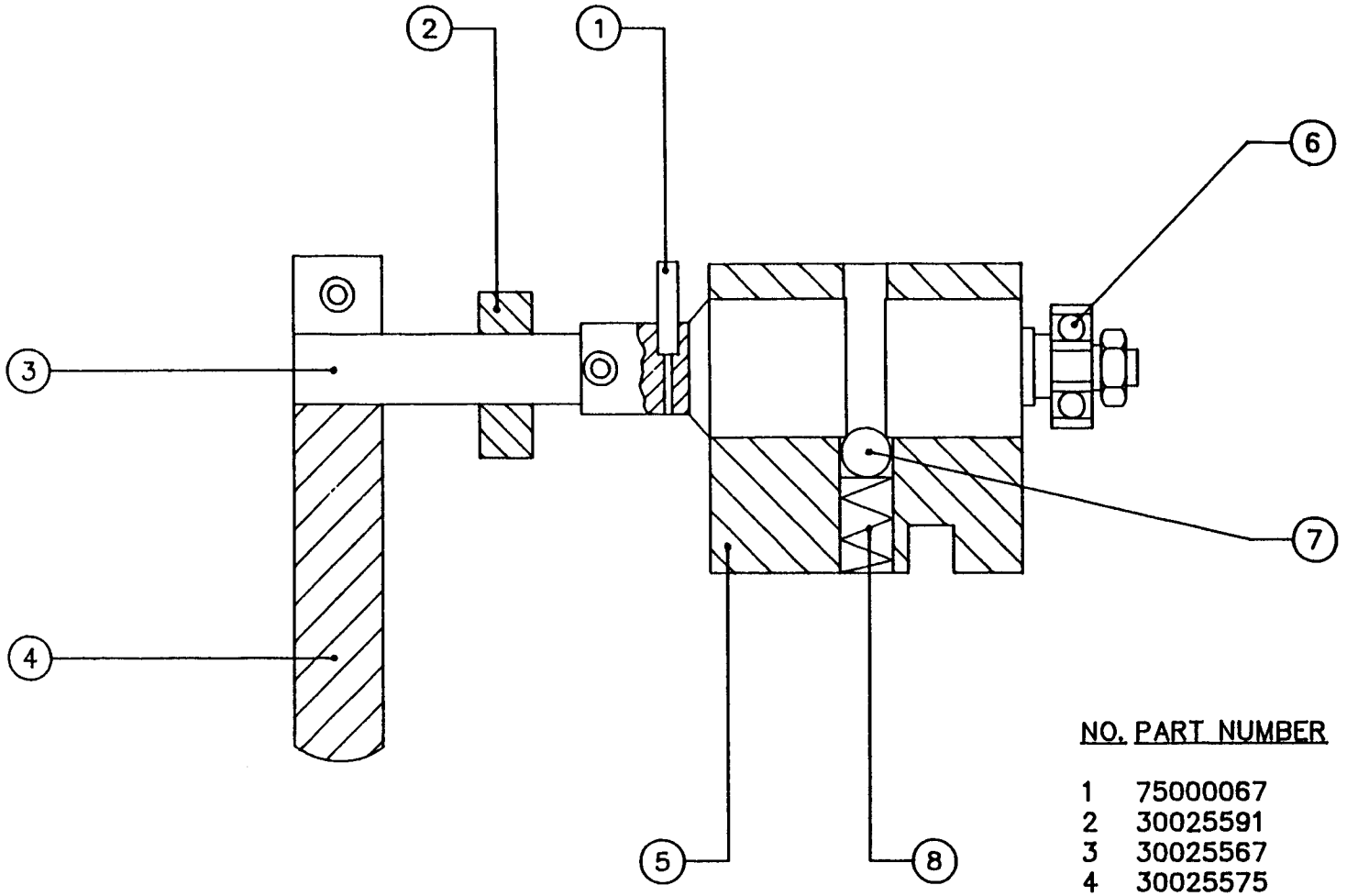

NO.	PART NUMBER	DESCRIPTION
1	75000067	SCREW 3x10 DIN 427
2	30025591	ECCENTRIC CAM
3	30025567	ECCENTRIC SHAFT
4	30025575	LEVER ARM
5	30025559	BLOCK
6	72500999	BEARING
7	72500581	6 mm BALL BEARING
8	30025583	SPRING

KARL SUSS	
CONTACT ASSEMBLY	
DWG. NO.: 25003577	REV. 00

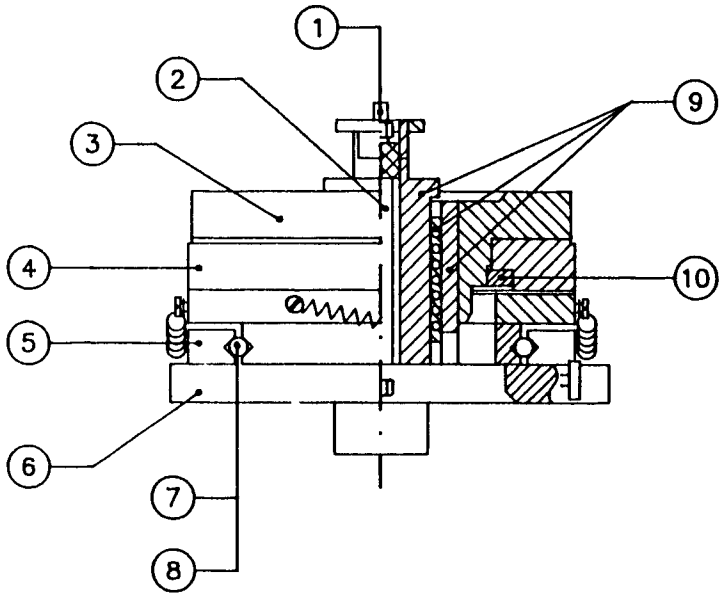

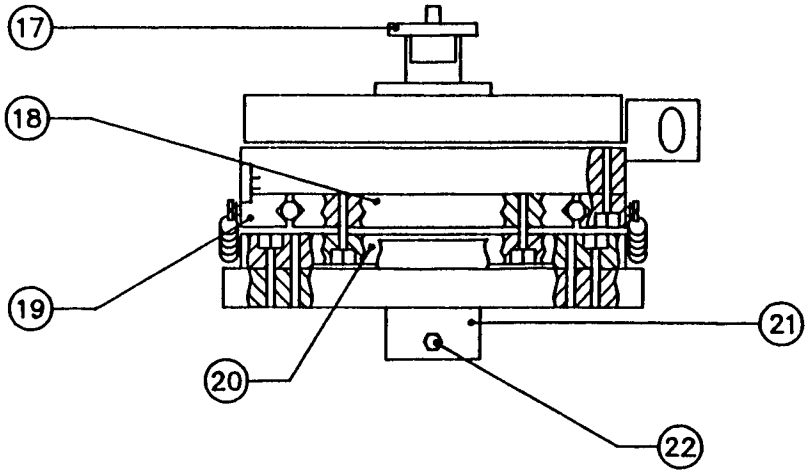

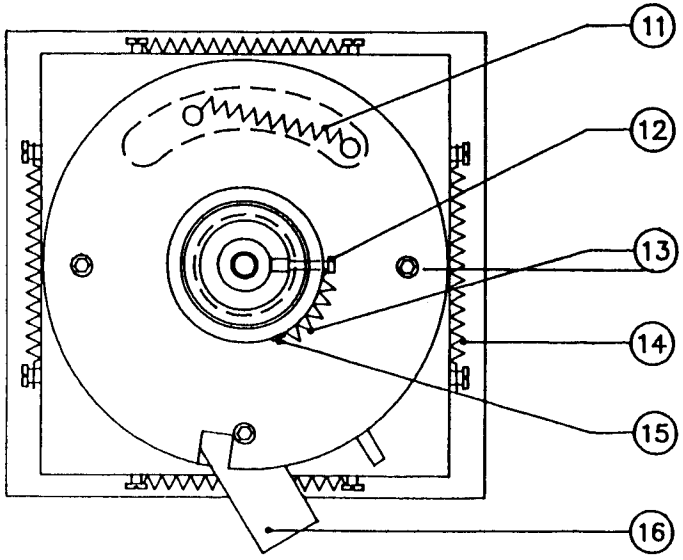

NO.	PART NUMBER	DESCRIPTION
1	61500070	FITTING
2	61502367	SILICON TUBE
3	30025923	ROTATION PLATE
4	30070783	TABLE PLATE
5	30025966	LEFT GUIDE
6	30025907	BASE PLATE
7	30025990 (4x)	BALL CAGE
8	72500581 (36x)	BALL BEARING
9	01005200	Z-AXIS ASSEMBLIES, 3 PCS.
10	30026008	RING
11	30026075	SPRING
12	30026032	SPRING BOLT
13	30026067	SPRING
14	30026318 (4x)	SPRING
15	30026040	PAN HEAD SCREW
16	30025982	MICROMETER HOLDER
17	30026415	Z-AXIS RING
18	30025931	TOP SLIDE
19	30025974	RT. GUIDE
20	30025958	BOTTOM SLIDE
21	61502235 (2X)	CLOSED PLATE
22	30026946	HOSE FITTING

KARL SUSS		Pg. 2.3
ALIGNMENT TABLE		
DWG. NO.: 25003666	REV. 00	

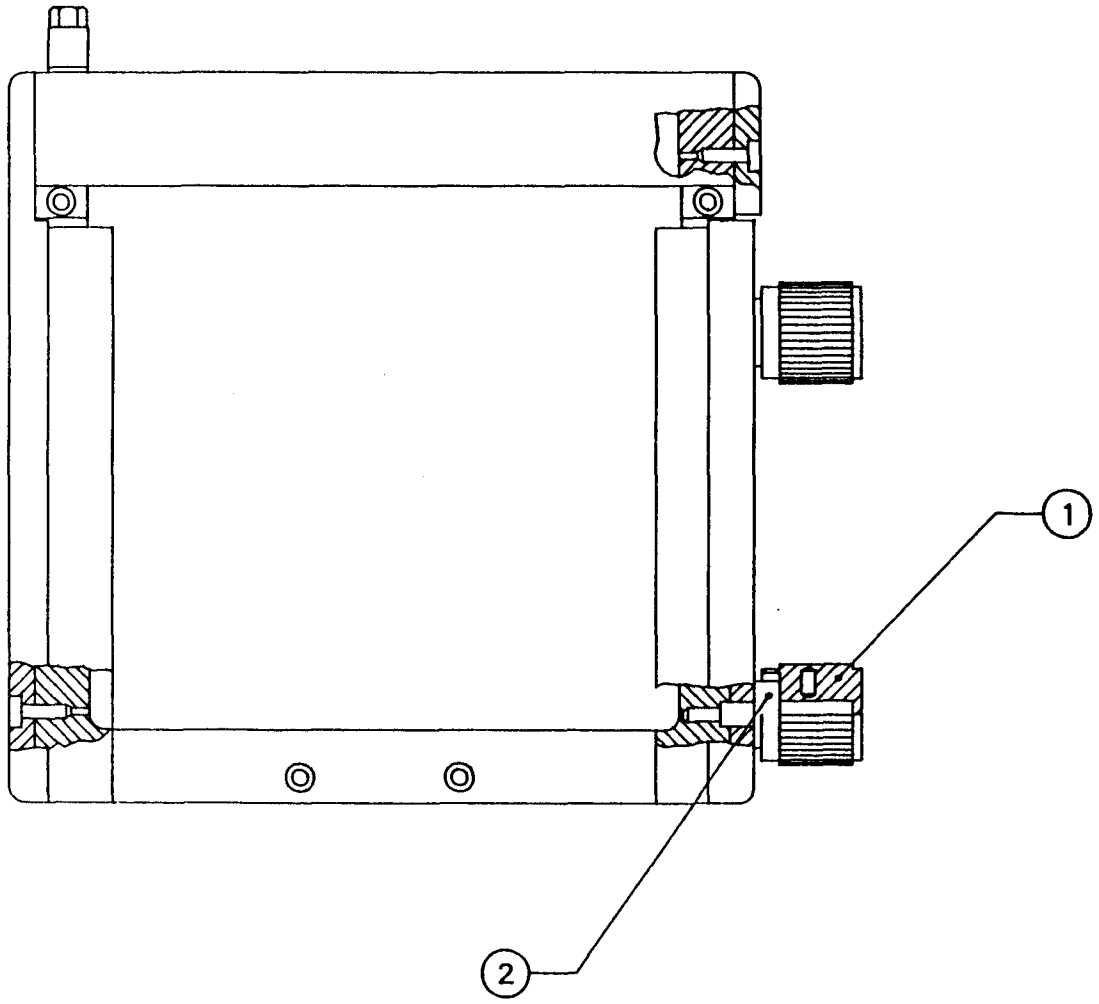

NO.	PART NUMBER	DESCRIPTION
1	60001593	KNOB
2	30026555	SHAFT

KARL SUSS		
MASKHOLDER FRAME		
DWG. NO.: 25003690	REV. 00	

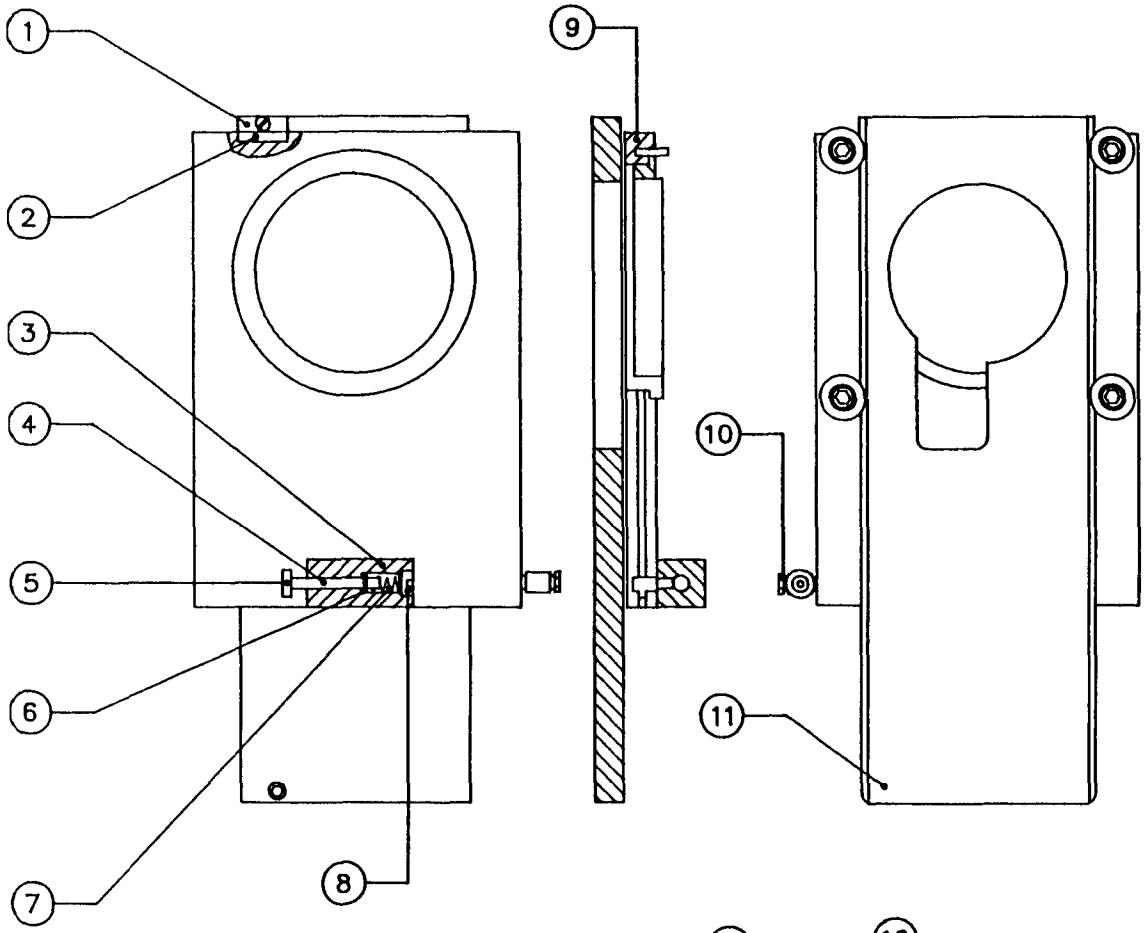

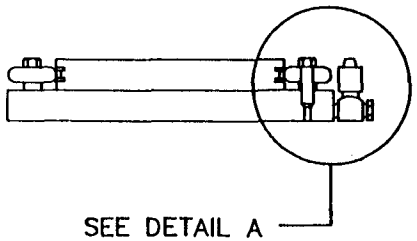

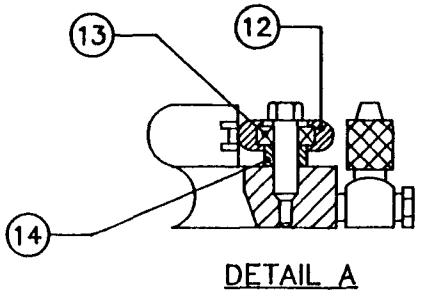

DETAIL A

NO.	PART NUMBER	DESCRIPTION
1	30032334	STOP BLOCK
2	60003804	MAGNET
3	30020549	BLOCK
4	30020557	MECHANICAL SWITCH
5	74000403	SCREW
6	70500118 (2x)	O RING 3x1
7	30020530	SPRING
8	30014743	SCREW
9	01002287	UPPER SLIDE
10	61500097 (1x)	HOSE FITTING
11	30032318	BOTTOM SLIDE
12	50004743 (4x)	BEARING GUIDE
13	72500190 (4x)	BALL BEARING
14	50004735	SPACER

KARL SUSS	
WAFER TRANSPORT	
DWG. NO.: 25004050	REV. 00

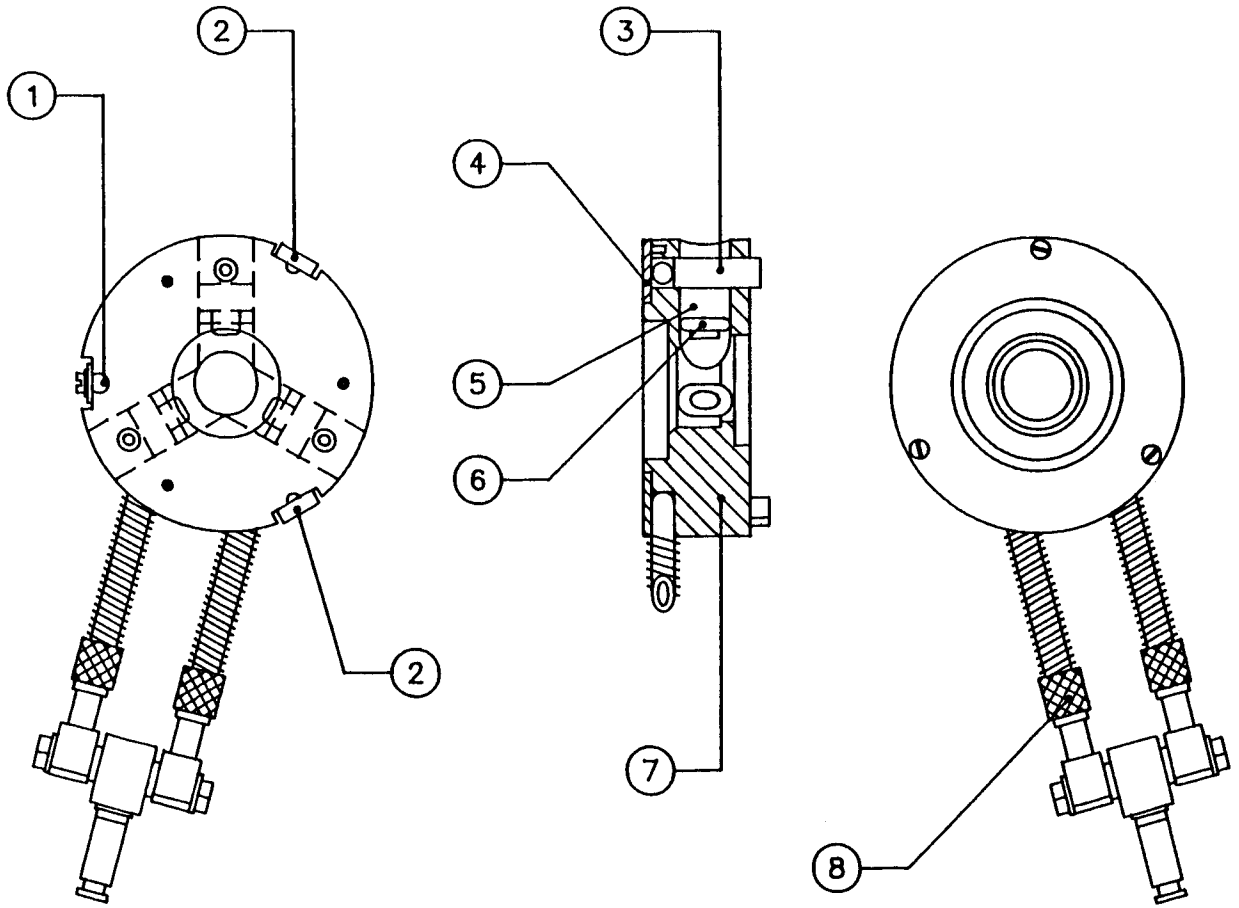

NO.	PART NUMBER	DESCRIPTION
1	30026687	STEEL BALL HOLDER
2	30026679	BALL HOLDER
3	30026660 (3x)	BOLT
4	30026652	BOTTOM PLATE
5	30026695 (3x)	BRAKE BOLT
6	70500509 (3x)	O RING
7	30026644	HEAD BRAKE
8	SEE DWG NO. 25003720	

KARL SUSS		Pg. 2.6
HEAD BRAKE		
DWG. NO.: 25004174	REV. 00	

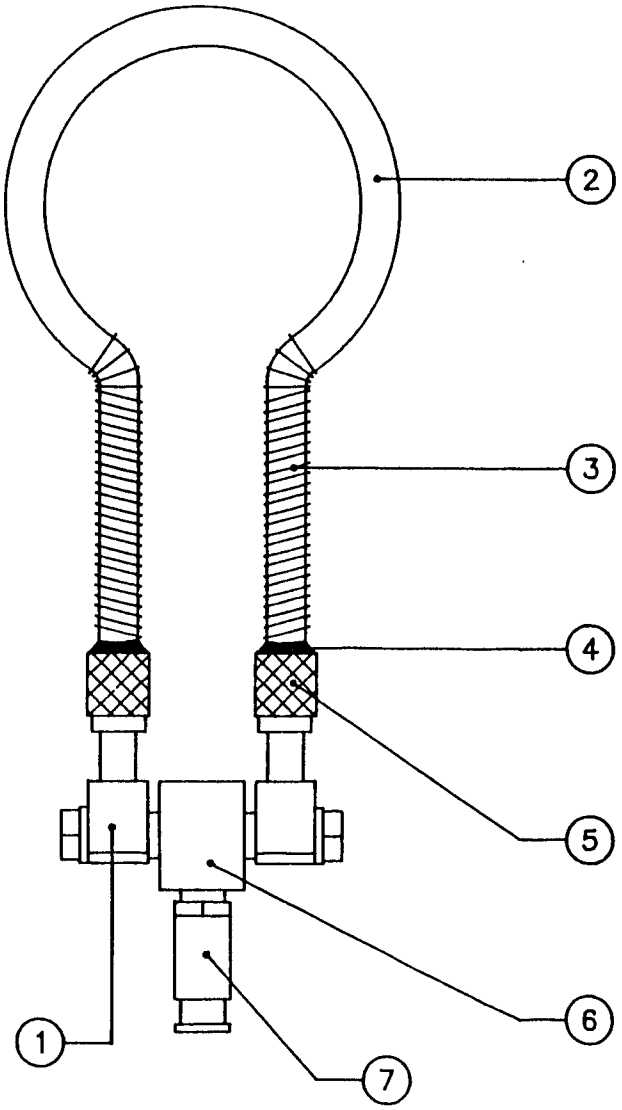

NO.	PART NUMBER	DESCRIPTION
1	61500097 (2x)	ELBOW
2	61502367	SILICON TUBE
3	30026725 (2x)	SPRING
4		SOLDER JOINT
5	30026717 (2x)	NUT
6	61500453	T FITTING
7	61500372	STRAIGHT FITTING

KARL SUSS		Pg. 2.7
AIR BLADDER		
DWG. NO.: 25003720	REV. 00	

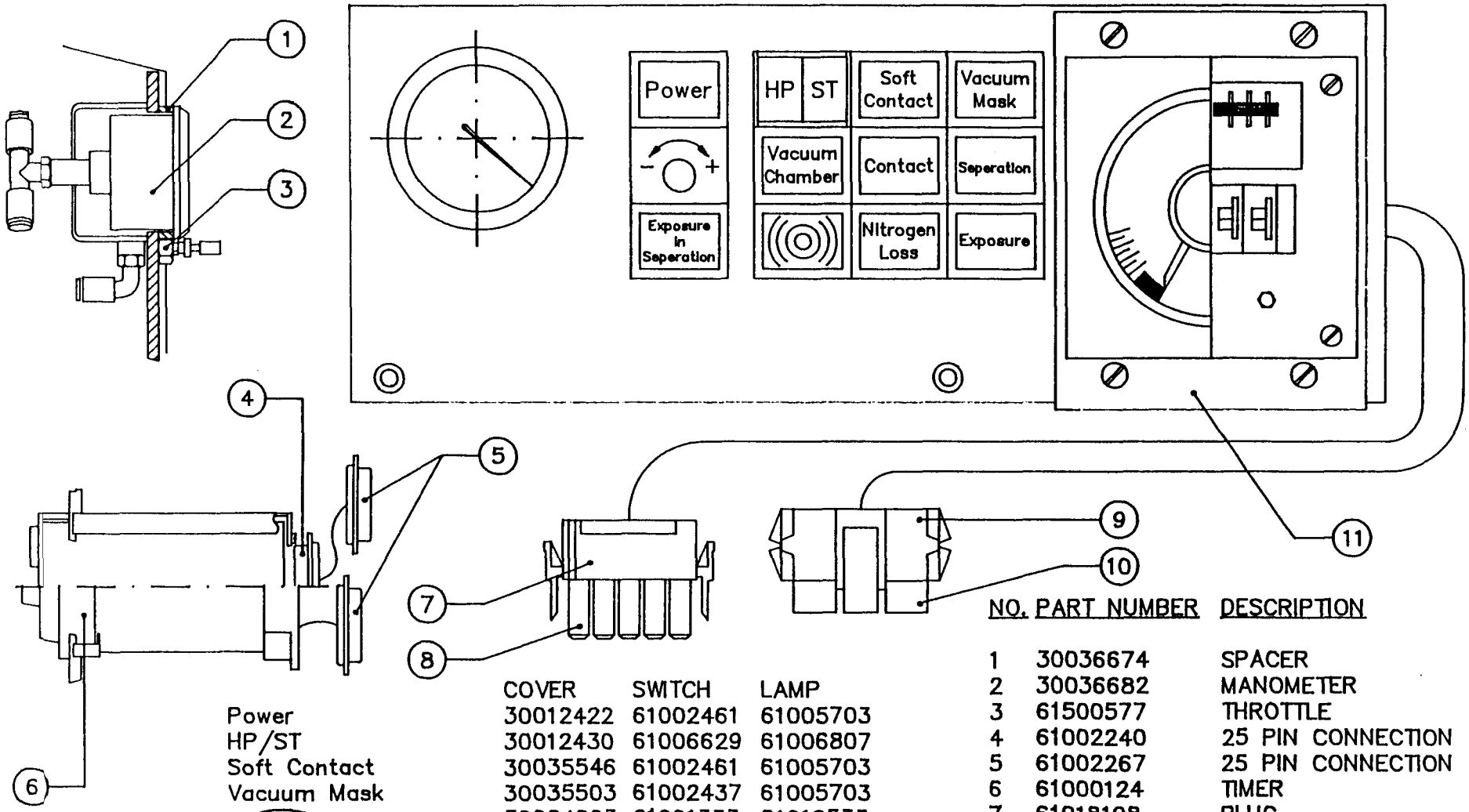

	COVER	SWITCH	LAMP
Power	30012422	61002461	61005703
HP/ST	30012430	61006629	61006807
Soft Contact	30035546	61002461	61005703
Vacuum Mask	30035503	61002437	61005703
– +	30024803	61001333	61010533
Vacuum Chamber	30012457	61002429	61005703
Contact	30012449	61002453	61005703
Seperation	30035430	61002453	61005703
Exposure in seperation	30035422	61002461	61005703
Nitrogen Loss	30035392	61002437	61005703
Exposure	30012473	61002429	
((◎))		61017957	

NO.	PART NUMBER	DESCRIPTION
1	30036674	SPACER
2	30036682	MANOMETER
3	61500577	THROTTLE
4	61002240	25 PIN CONNECTION
5	61002267	25 PIN CONNECTION
6	61000124	TIMER
7	61018198	PLUG
8	61010510	PIN
9	61017426	PLUG
10	61018481	PIN
11	30010128	HOLDER

KARL SUSS	
FRONT PLATE 200W	
DWG. NO.: 26001799	REV. 00

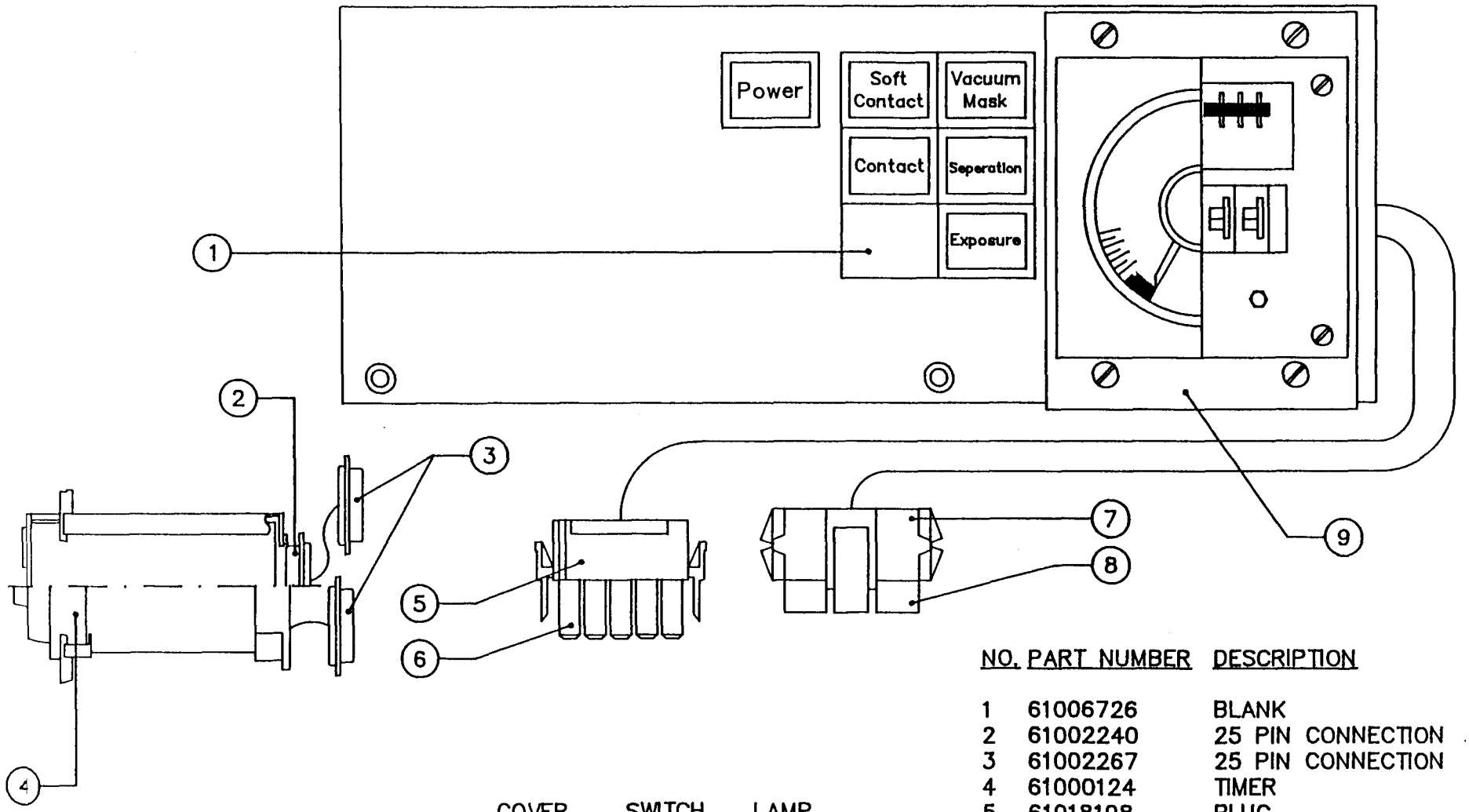

	COVER	SWITCH	LAMP
Power	30012422	61002461	61005703
Soft Contact	30035546	61002461	61005703
Vacuum Mask	30035503	61002437	61005703
Contact	30012449	61002453	61005703
Seperation	30035430	61002453	61005703
Exposure	30012473	61002429	

NO.	PART NUMBER	DESCRIPTION
1	61006726	BLANK
2	61002240	25 PIN CONNECTION
3	61002267	25 PIN CONNECTION
4	61000124	TIMER
5	61018198	PLUG
6	61010510	PIN
7	61017426	PLUG
8	61018481	PIN
9	30010128	HOLDER

KARL SUSS

FRONT PLATE STD.

DWG. NO.: 26001756 | REV. 00

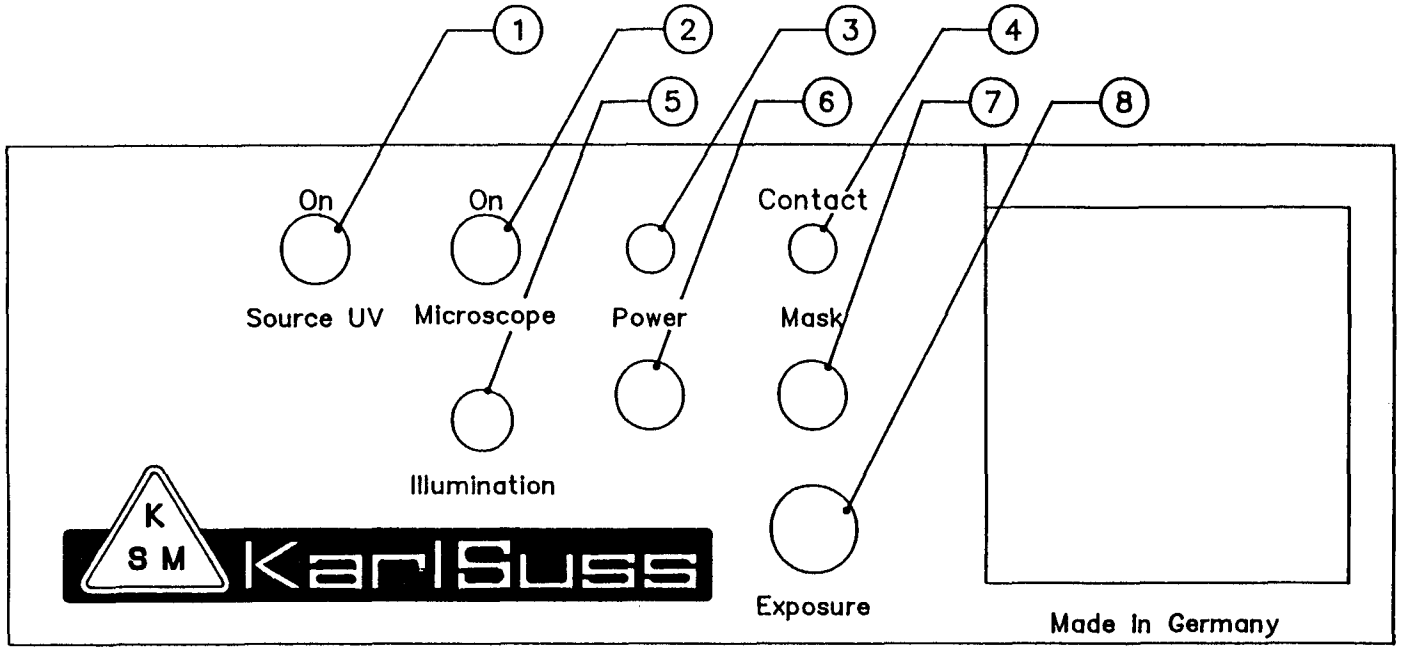

NO.	PART NUMBER	DESCRIPTION
1	61004871	SWITCH (NOT USED)
2	61004871	MICROSCOPE SWITCH
3	61005967	SEPERATION LIGHT
	61002054	LAMP
4	61005959	CONTACT LIGHT
	61002054	LAMP
5	610RS289	ILLUMINATION POT
6	61004871	POWER SWITCH
7	61500585	MASK VACUUM SWITCH
8	61004863	EXPOSURE SWITCH

KARL SUSS		Pg. 3.2
OLDER VERSION PANEL		
DWG. NO.: 26000598	REV. 00	

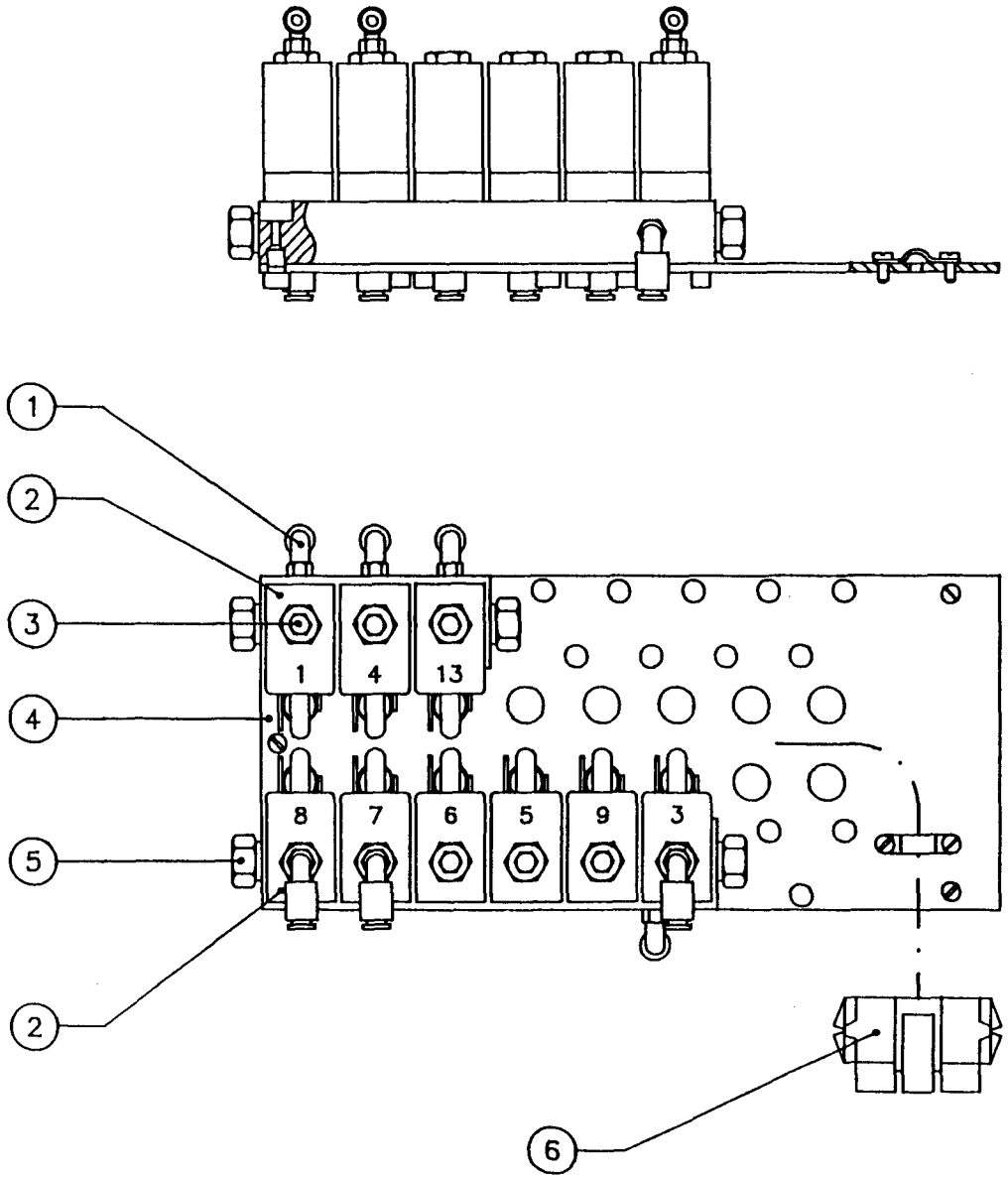

NO.	PART NUMBER	DESCRIPTION
1	61500208	ELBOW
2	61500356	VALVE
3	30035570	PLUG WITH HOLE
4	30035198	PLATE
5	61500143	PLUG
6	61017418	18 PIN CONNECTOR

KARL SUSS	
PNEUMATIC ASSY. 200W	
DWG. NO.: 21500088	REV. 00

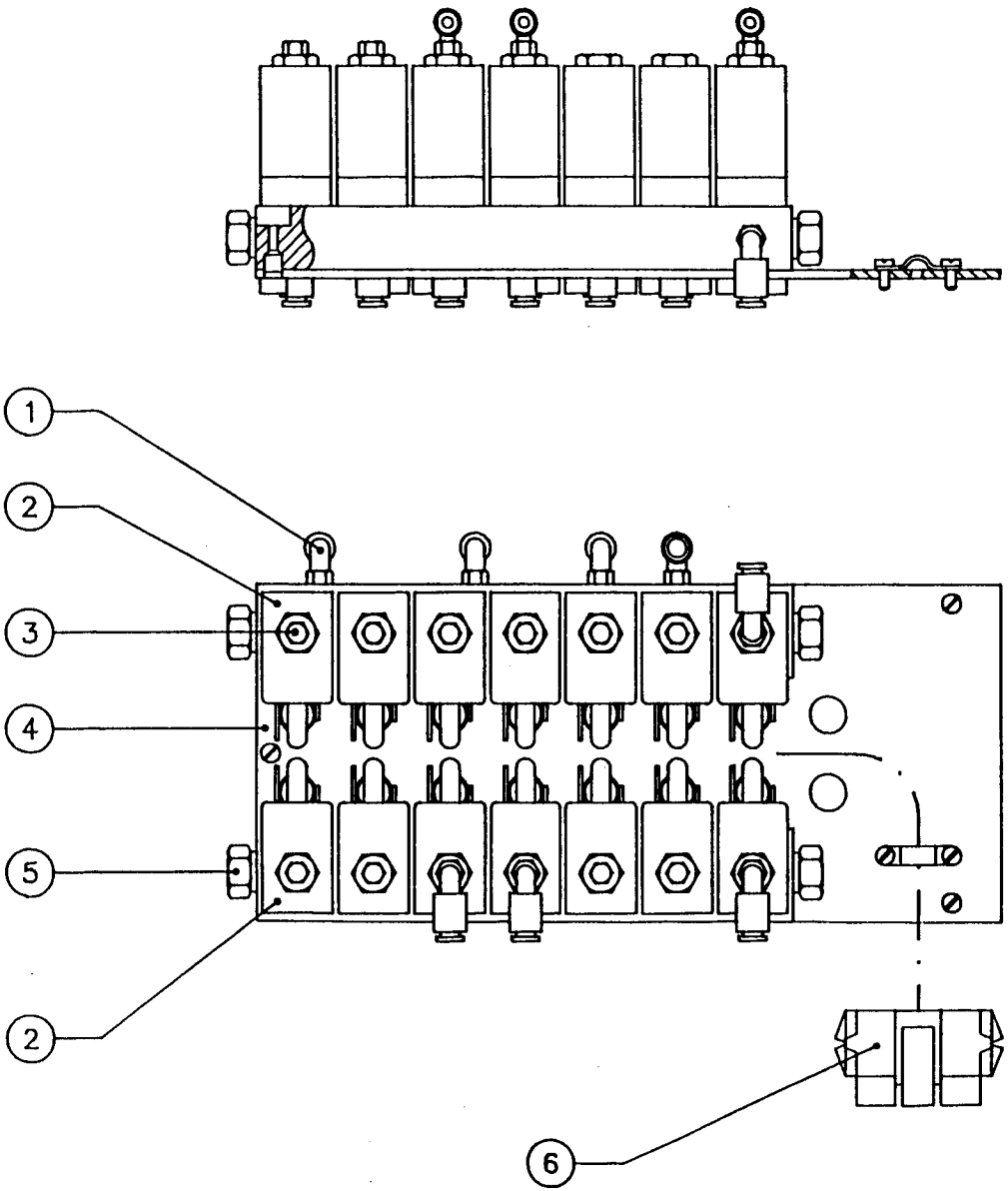

NO.	PART NUMBER	DESCRIPTION
1	61500208	ELBOW
2	61500356	VALVE
3	30035570	PLUG WITH HOLE
4	30035198	PLATE
5	61500143	PLUG
6	61017418	18 PIN CONNECTOR

KARL SUSS	
PNEUMATIC ASSY. 350W	
DWG. NO.: 21500061	REV. 00

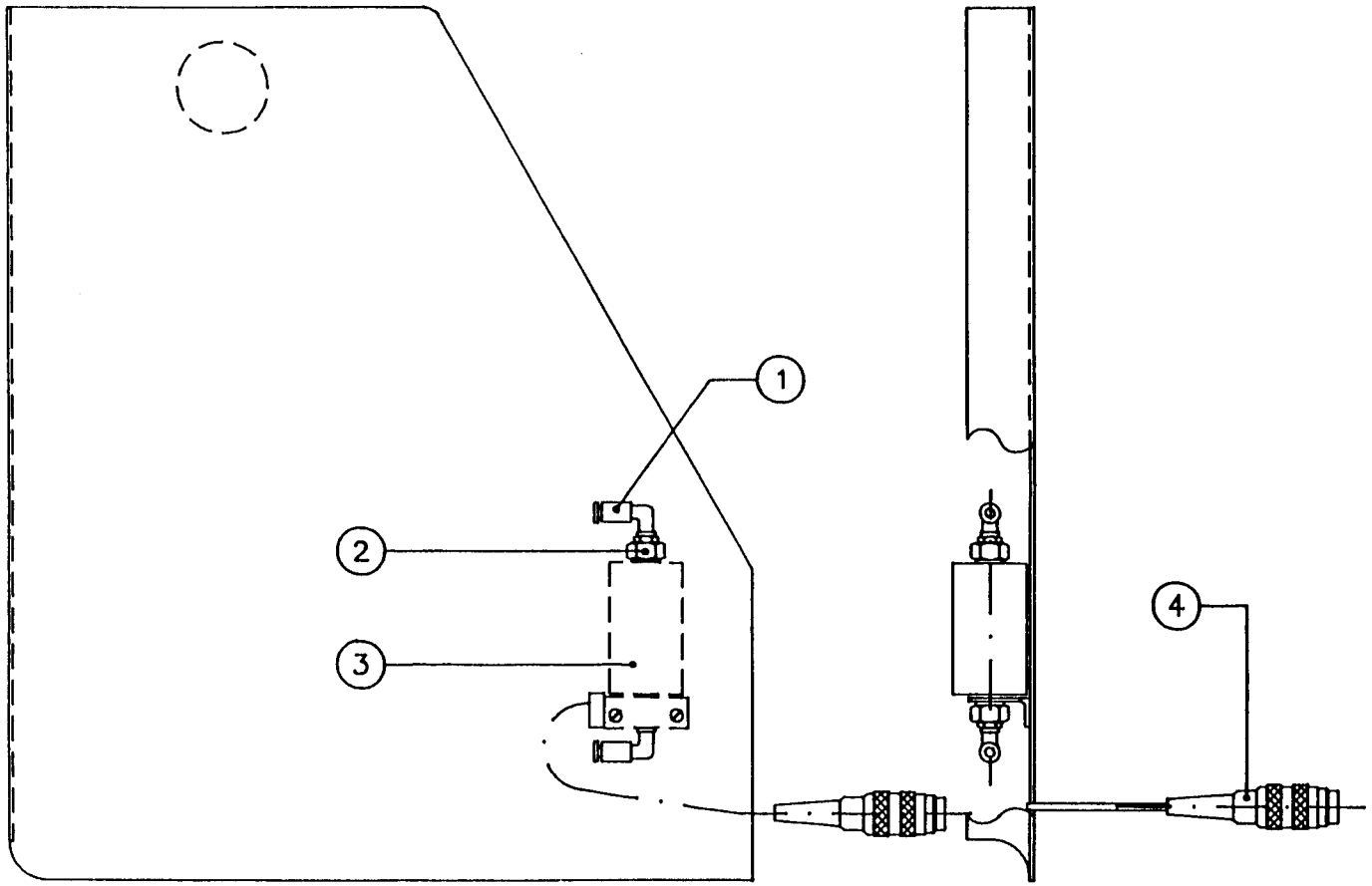

NO.	PART NUMBER	DESCRIPTION
1	61500208 (2x)	ELBOW
2	61500127 (2x)	NIPPLE
3	61502472	N^2 FLOW SWITCH
4	61017523	PLUG

KARL SUSS	
NITROGEN SENSOR	
DWG. NO.: 25002074	REV. 00

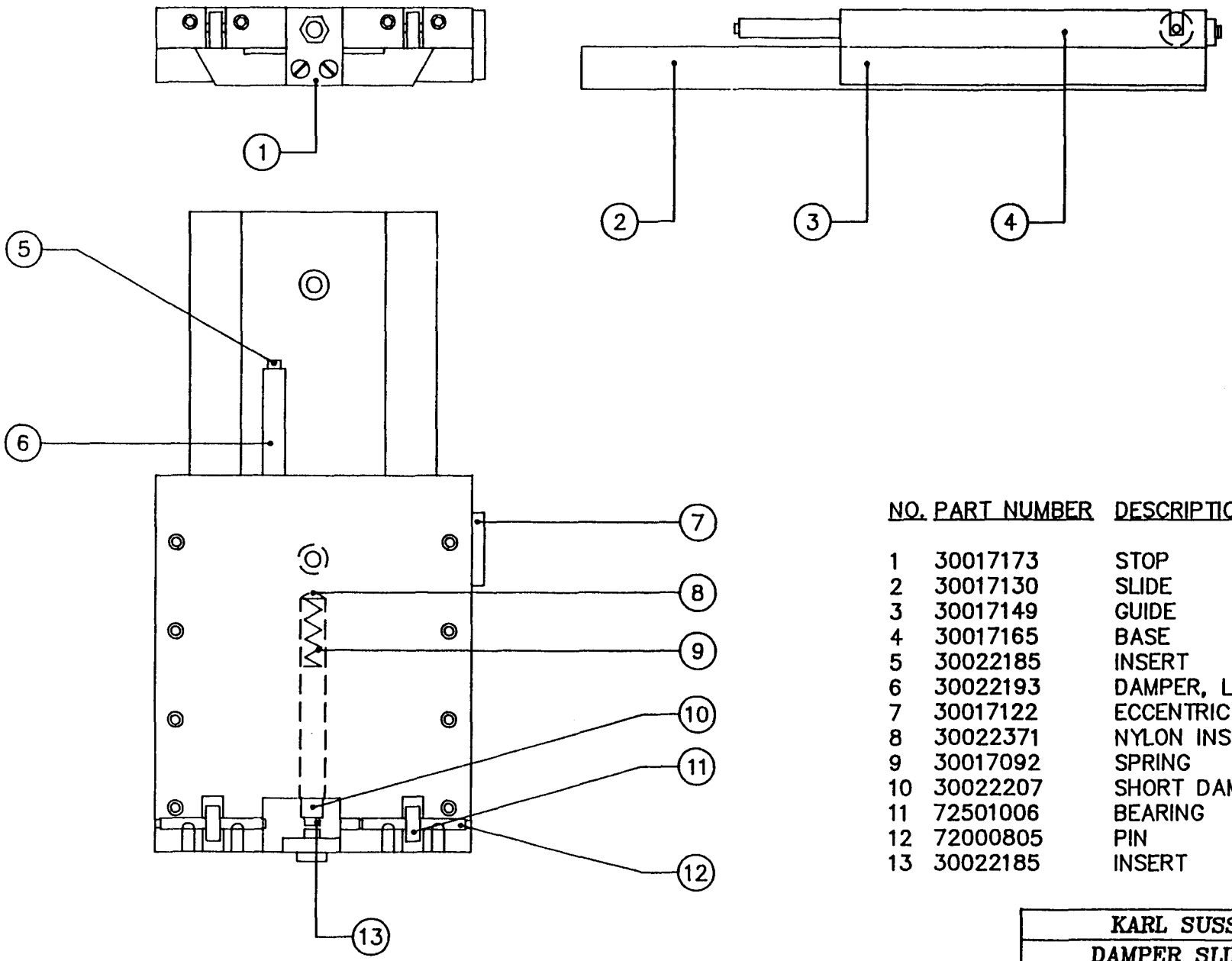

NO.	PART NUMBER	DESCRIPTION
1	30017173	STOP
2	30017130	SLIDE
3	30017149	GUIDE
4	30017165	BASE
5	30022185	INSERT
6	30022193	DAMPER, LONG
7	30017122	ECCENTRIC
8	30022371	NYLON INSERT
9	30017092	SPRING
10	30022207	SHORT DAMPER
11	72501006	BEARING
12	72000805	PIN
13	30022185	INSERT

KARL SUSS	
DAMPER SLIDE	
DWG. NO.: 25002260	REV. 00

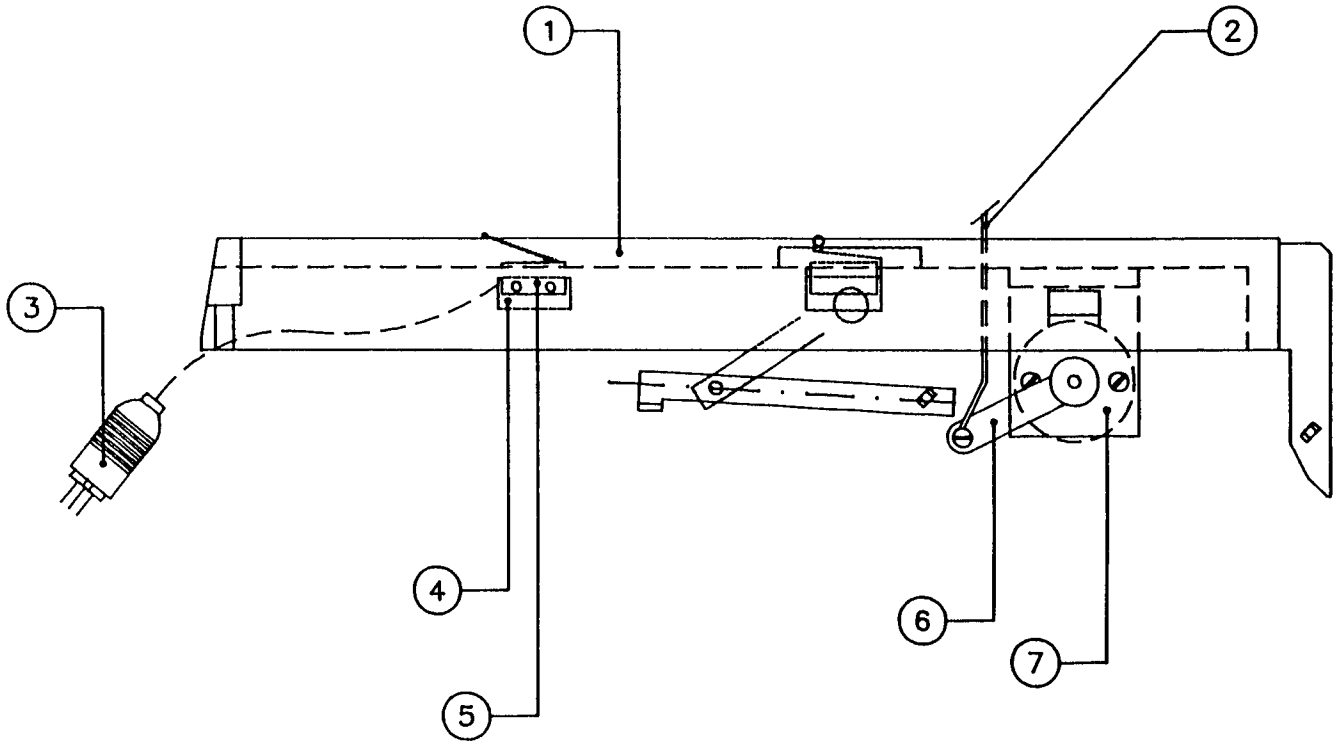

NO.	PART NUMBER	DESCRIPTION
1	30017491	BASE PLATE
2	30017459	ARM
3	61004332	PLUG
4	30017521	ANGLE BLOCK
5	61005983	MICROSWITCH
6	25002287	ARM
7	61007285	MOTOR

KARL SUSS		Pg. 5.0
MOUNTING PLATE		
DWG. NO.: 25002295	REV. 00	

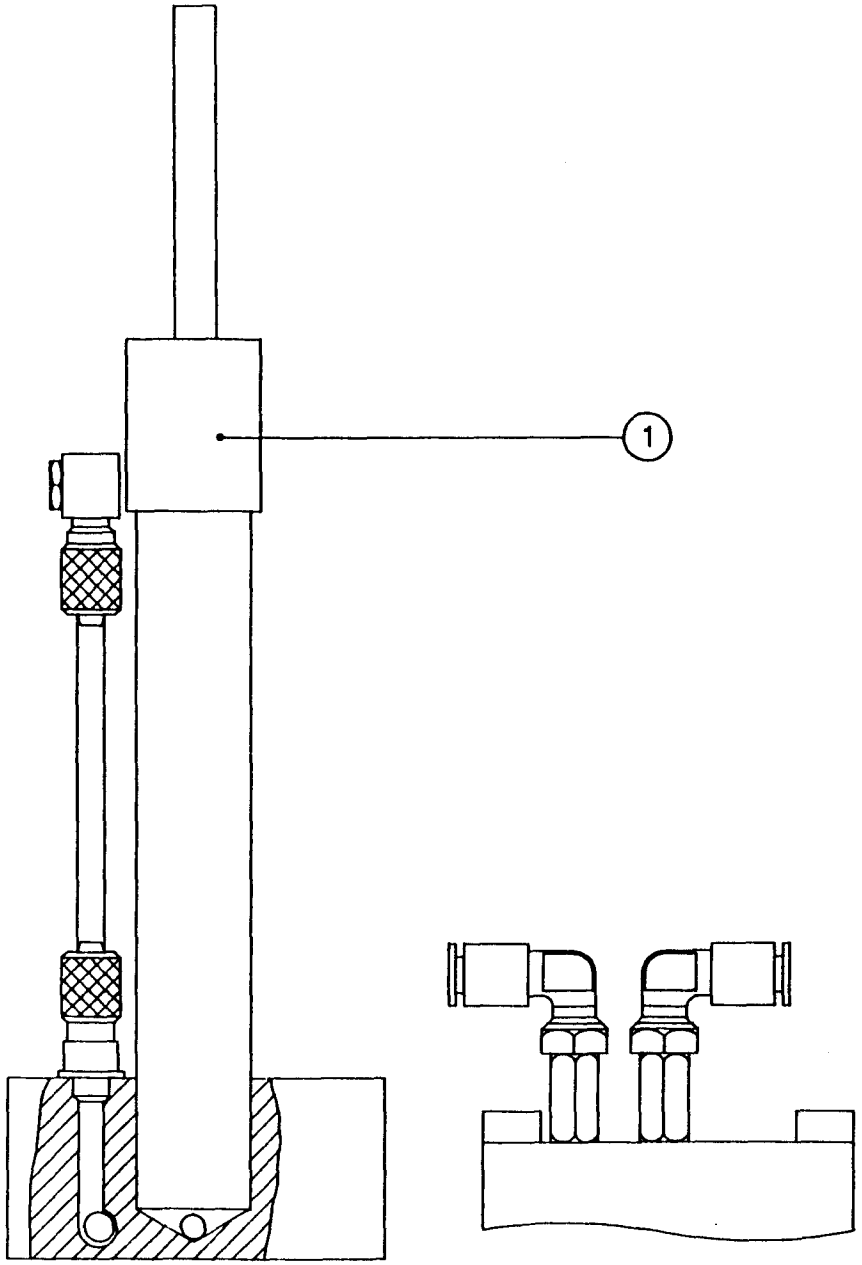

NO.	PART NUMBER	DESCRIPTION
1	25002317	AIR CYLINDER

KARL SUSS	
MIRROR HOUSE PISTON	
DWG. NO.: 25002317	REV. 00

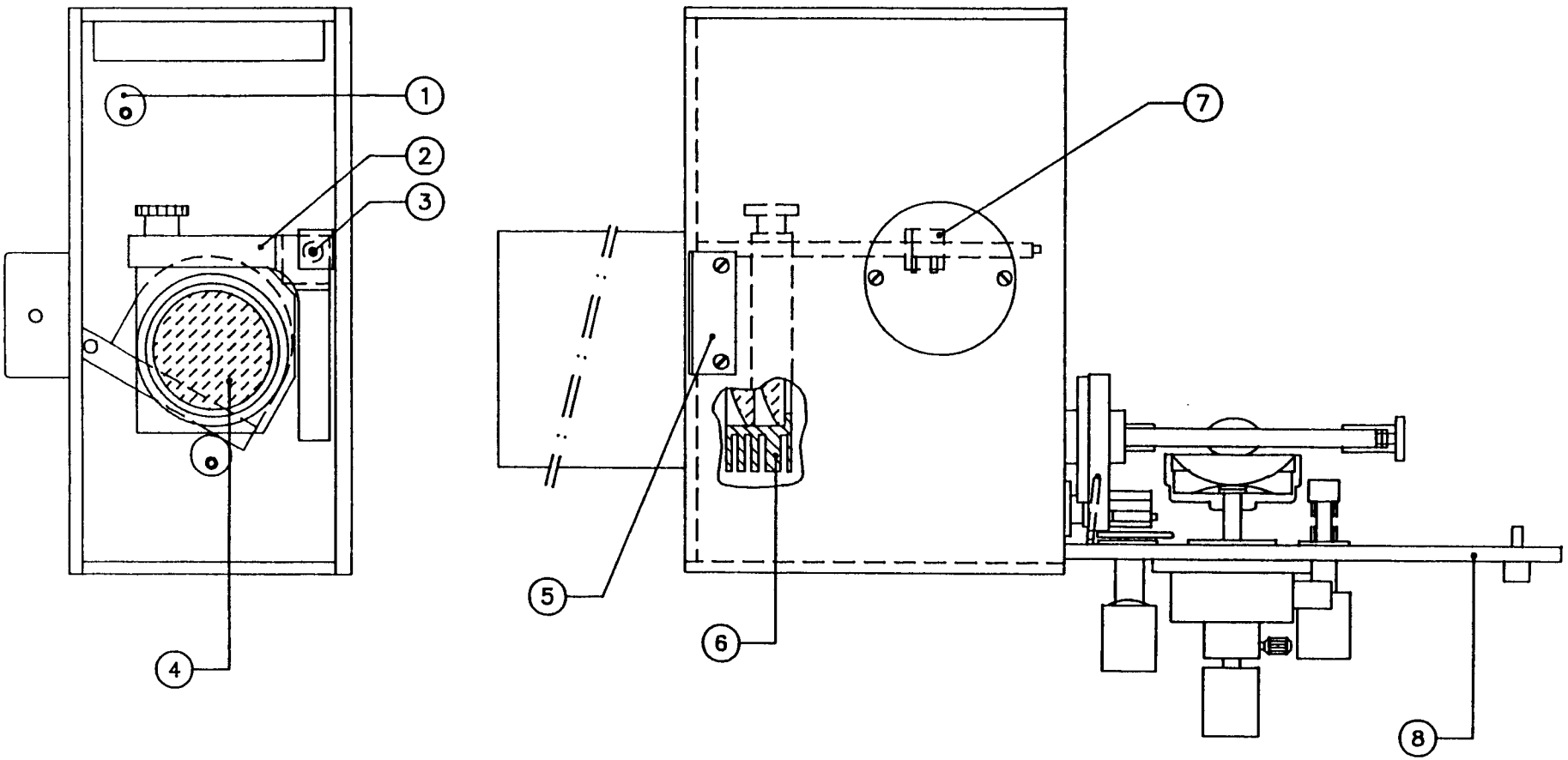

NO.	PART NUMBER	DESCRIPTION
1	30017890 (2x)	CAM
2	25002457	CONDENSOR LENS HOLDER
3	30018099	SPINDLE
4	60501073 (2x)	LENS
5	SEE DWG. NO. 25002430	
6	25500252	CONDENSOR LENS ASSEMBLY
7	30018064	CORNER
8	SEE DWG. NO. 25002503	

KARL SUSS		Pg. 7.0
200W LAMPHOUSE		
DWG. NO.: 25002406	REV. 00	

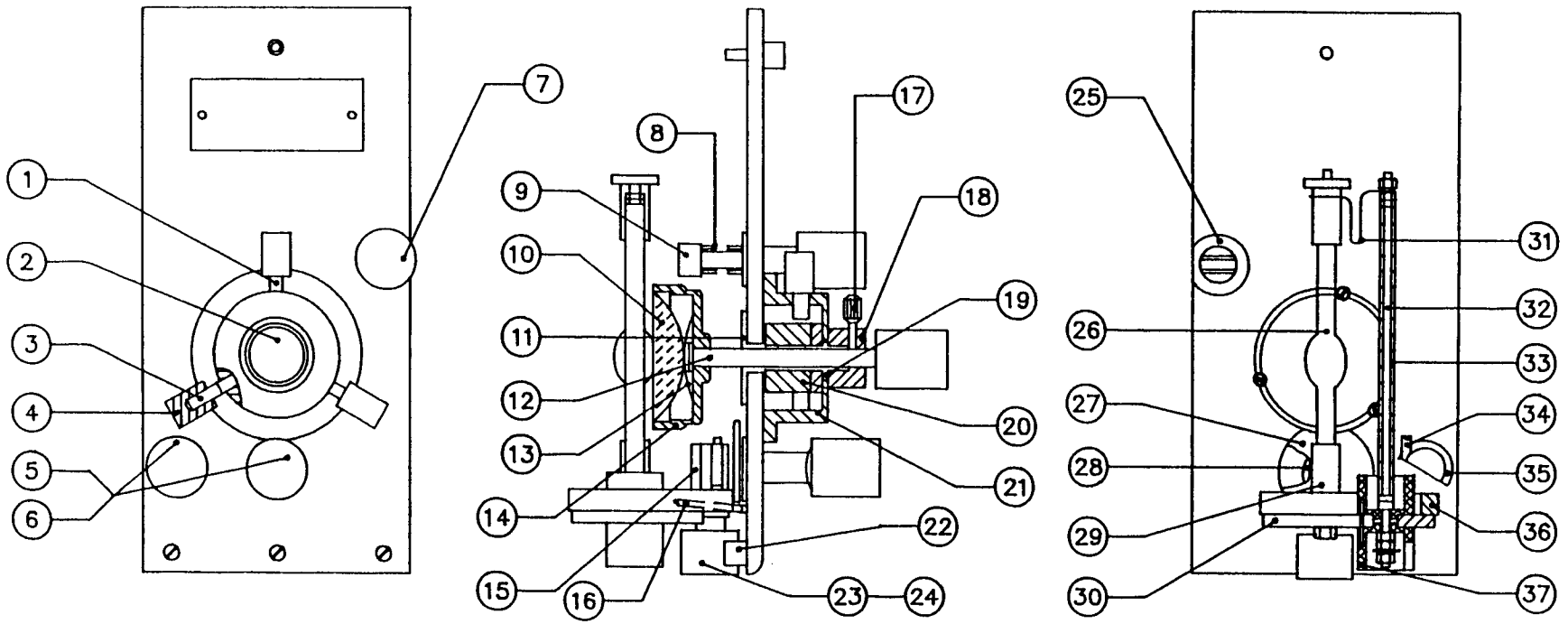

NO.	PART NUMBER	DESCRIPTION
1	25002511	SCREW
2	30018439	BUTTON
3	30018455	SPRING
4	30018374	BUSHING
5	30018277	BUSHING
6	30018439	BUTTON
7	30018439	BUTTON
8	30018412	SPRING
9	30018404	COUPLING
10	60501103	WOLF MIRROR
11	30018293	INSERT
12	30018366	SPINDLE
13	30018501	SPRING CLIP

NO.	PART NUMBER	DESCRIPTION
14	30018498	MIRROR HOLDER
15	30018242	BEARING CAP
16	30018463	SPRING
17	30018358	SCREW
18	30018323	SPACER
19	30018315	WASHER
20	30018307	HOLDER
21	30018331	WHEEL
22	30018471	BRACKET
23	30018579	BEARING
24	30018595	SPRING
25	30018420	COUPLING
26	61000094	LAMP
27	30018285	ECCENTRIC

NO.	PART NUMBER	DESCRIPTION
28	30018277	BUSHING
29	30018536	ADAPTER
30	30018528	ISOLATION PLATE
31	26001101	ANODE WIRE
32	30018544	END TAB
33	61007382	ISOLATOR
34	30018587	SCREW
35	30018269	BUSHING
36	30018250	LAMPHOLDER
37	30014557	TEFLON ISOLATOR

KARL SUSS	
200W LAMPHOUSE	
DWG. NO.: 25002503	REV. 00

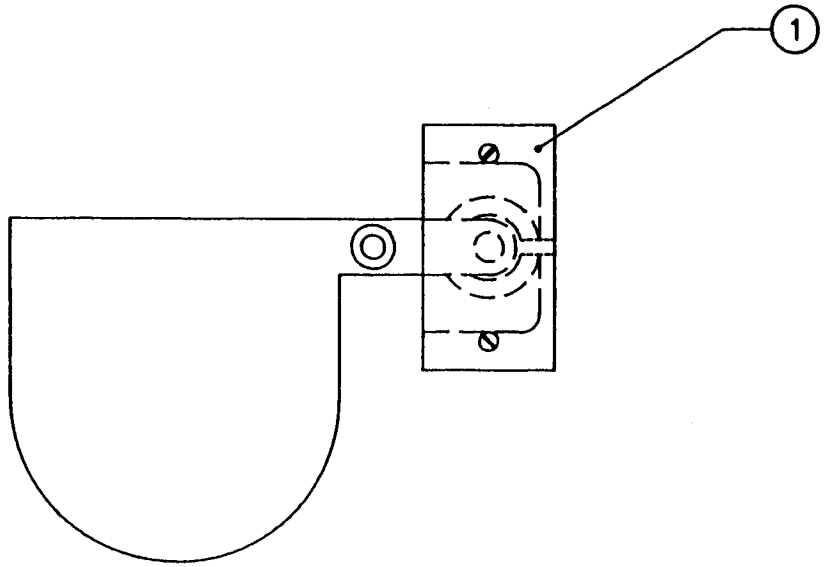

NO.	PART NUMBER	DESCRIPTION
1	25002430	SHUTTER ASSEMBLY

KARL SUSS		
SHUTTER ASSY. 200W		
DWG. NO.: 25002430	REV. 00	

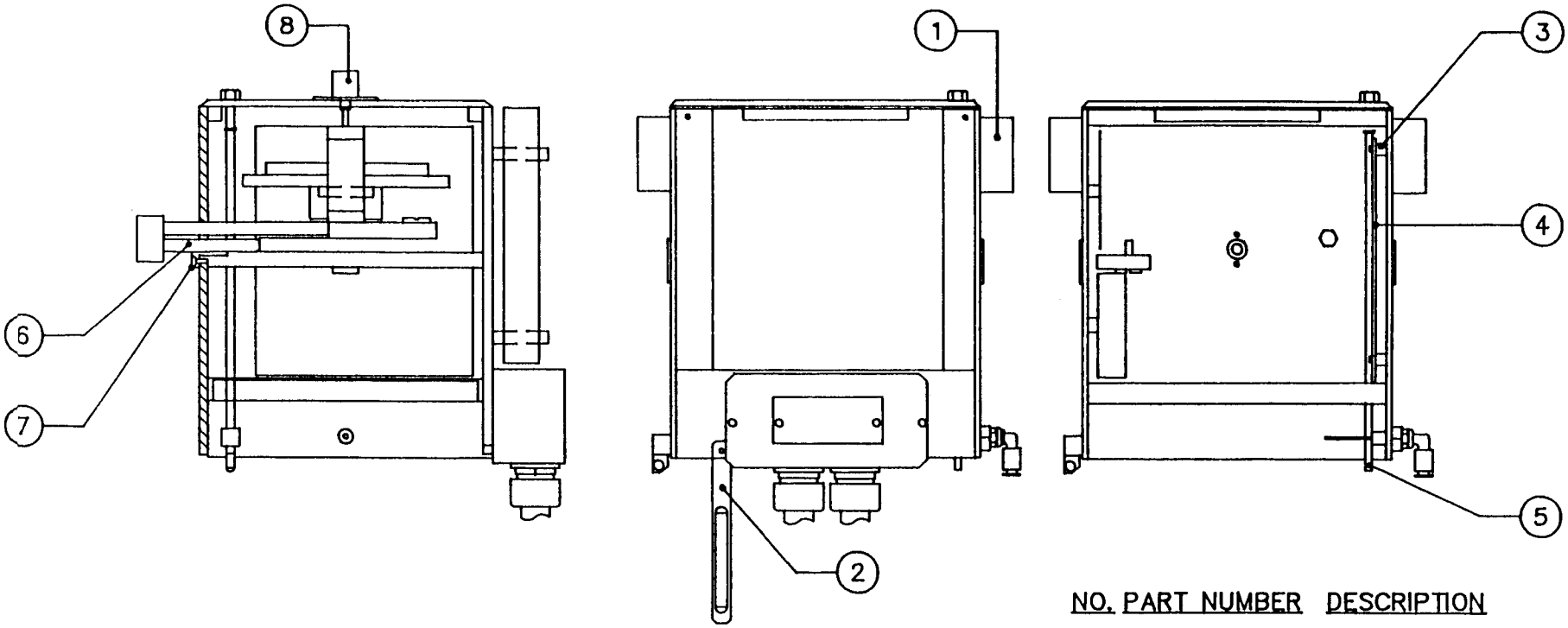

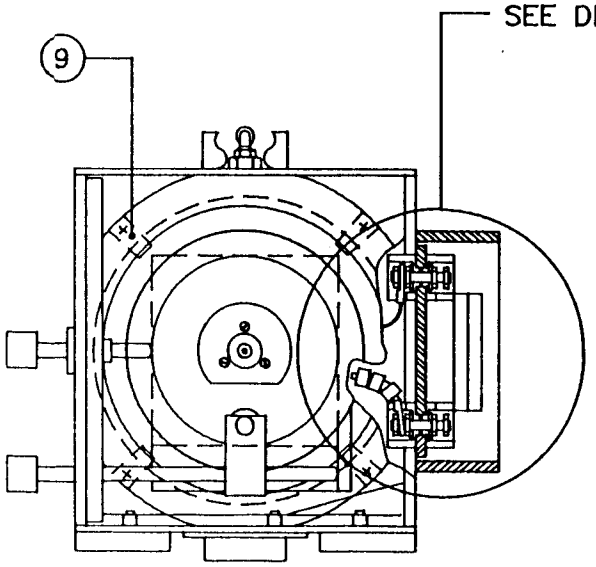

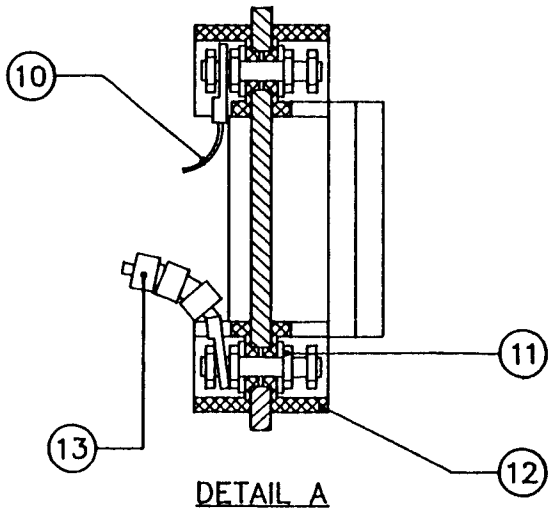

DETAIL A

NO.	PART NUMBER	DESCRIPTION
1	30019648	MAGNET HOLDER
2	30018196	HINGE
3	30009367 (6x)	SPACER
4	30019605	SHEILD
5	30022088	MOUNTING ROD
6	30014441	ADJUSTING ROD
7	30014492	HUB
8	SEE DWG NO. 25002112	
9	30009650 (4x)	CLIP
10	260W1001	LAMPWIRE
11	30014565	BOLT
12	30014557	TEFLON INSULATOR
13	26001055	CATHODE CABLE

KARL SUSS		Pg. 8.0
LAMPHOUSE TOP 350W		
DWG. NO.: 25002732	REV. 00	

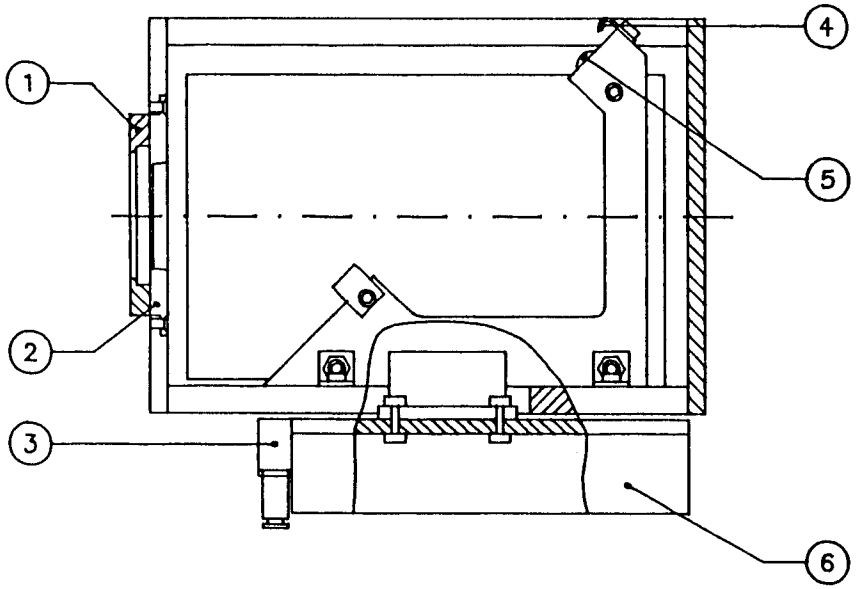

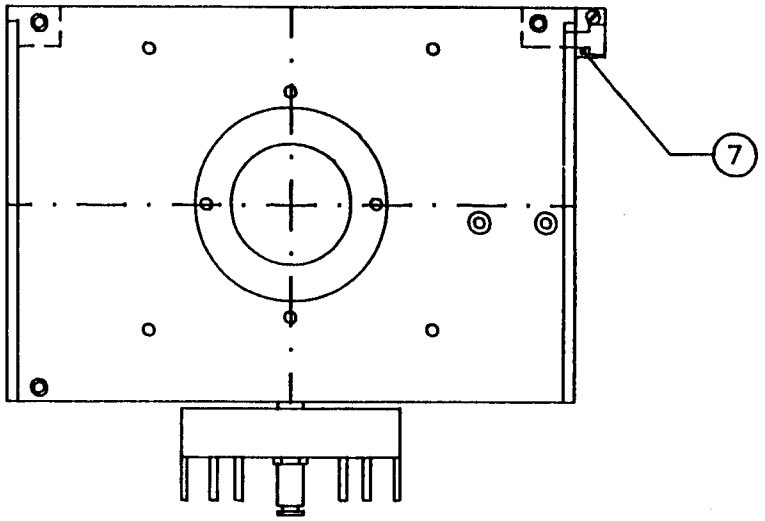

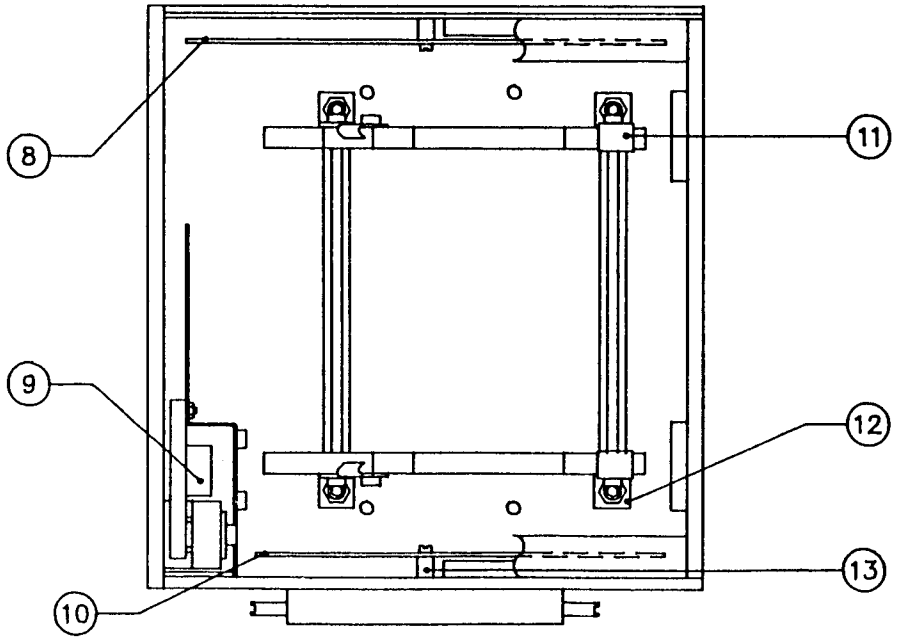

NO.	PART NUMBER	DESCRIPTION
1	30009707	LENS FRAME
2	30009685	RETAINER
3	25001450	AIR BLOCK
4	30009650 (4x)	CLIP
5	30009669 (4x)	SCREW
6	30009561	COOLING SYSTEM
7	30020182	SUPPORT
8	30009340	PANEL
9	SEE DWG. NO. 25002023	
10	30009359	PANEL
11	30009596 (2x)	CLAMP, FRAME
12	60001623 (4x)	MOUNTING BRACKET
13	30009367 (4x)	SPACER

KARL SUSS	
LAMPHOUSE BOTTOM	
DWG. NO.: 25002740	REV. 00

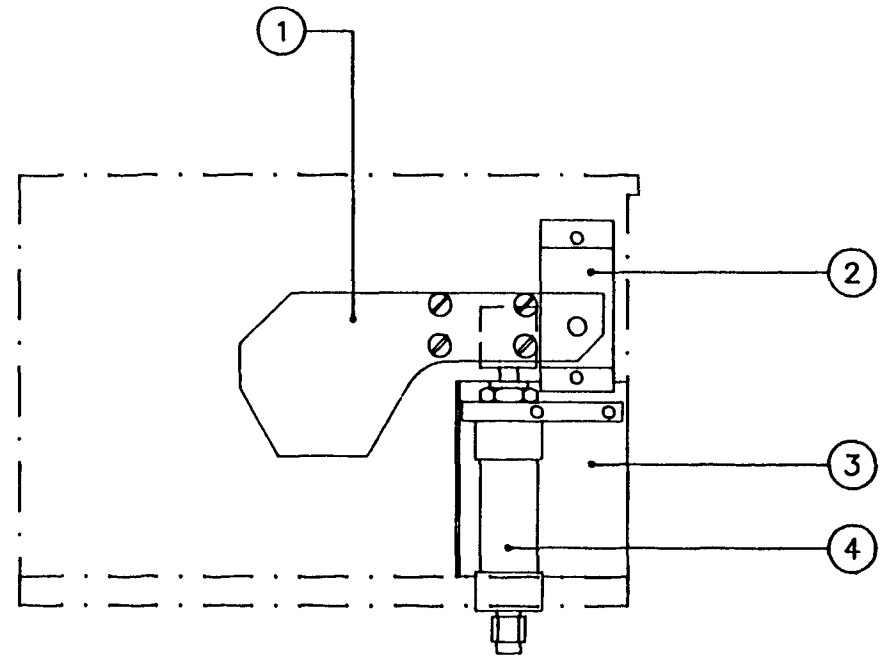

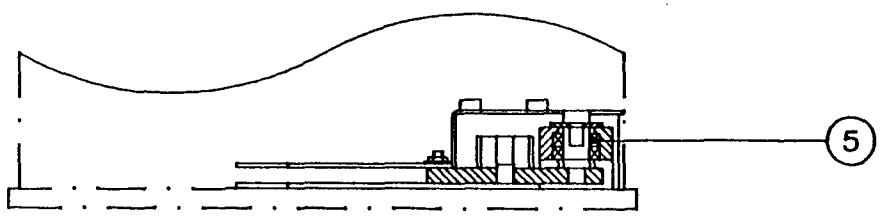

NO.	PART NUMBER	DESCRIPTION
1	30022568	SHUTTER
2	30022525	BLOCK
3	30022584	CYLINDER COVER
4	30022509	CYLINDER
5	72501022 (2x)	BEARING

KARL SUSS		
SHUTTER ASSEMBLY		
DWG. NO.: 25002023	REV. 00	Pg. 8.2

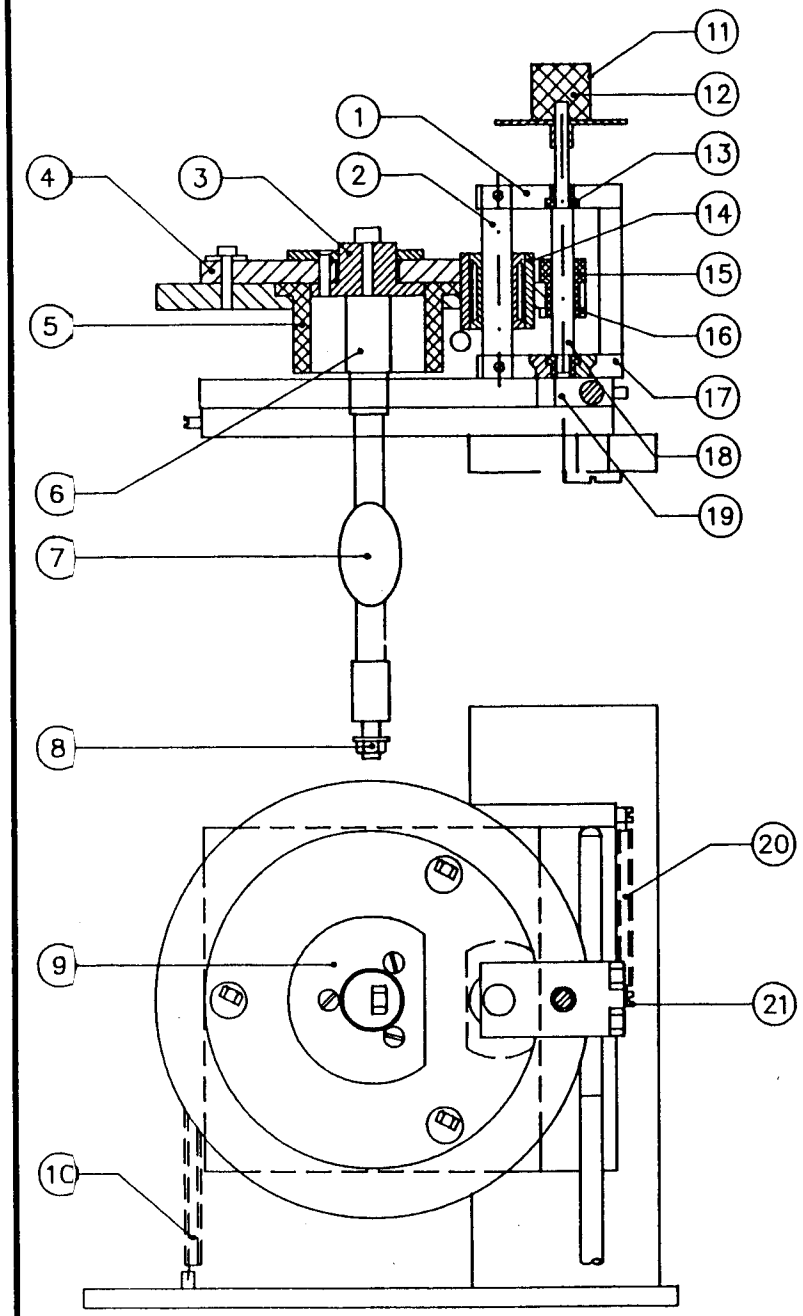

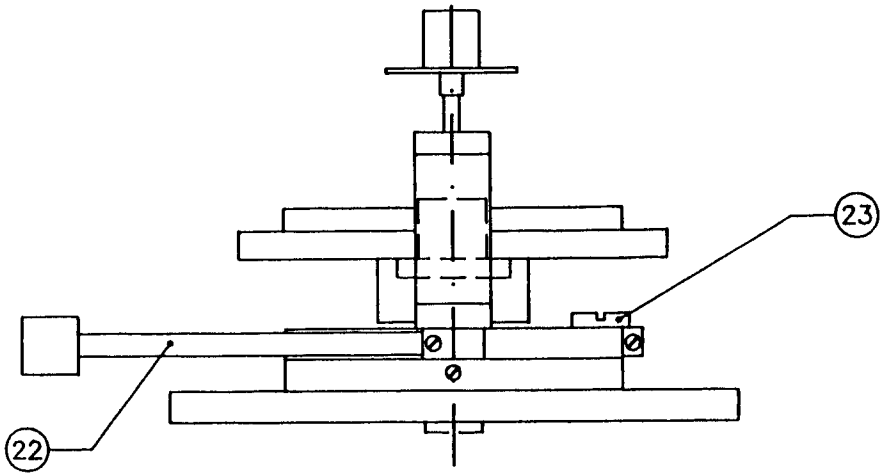

NO.	PART NUMBER	DESCRIPTION
1	30015308	MOUNTING PLATE
2	30013674	Z ROD
3	300AD002	LAMPSOCKET
4	30013704	ISOLATION PLATE
5	30013712	TEFLON BUSHING
6	300AD005	LAMP ADAPTER
7	61000078	350W LAMP
8	30021340	NUT
9	30022290	RING
10	30013968	SPRING
11	60004568	RED CAP
12	60005076	LAMPHOUSE KNOB
13	30013194	NYLON BUSHING
14	72501618	BALL BUSHING
15	30021758	NUT
16	30021766	LOCKNUT
17	30013747	BLOCK
18	30015324	LEAD SCREW
19	30013771	INSERT
20	30013887	SPRING
21	30013925	HEADLESS SCREW
22	30013720	LEAD SCREW
23	30013755	SCREW

KARL SUSS		Pg. 8.3
LAMP MOVEMENT		
DWG. NO.: 25002112	REV. 00	

THIS DRAWING CONTAINS INFORMATION WHICH IS THE PROPRIETARY PROPERTY OF KARL SUSS IT IS RECEIVED IN CONFIDENCE AND ITS CONTENTS MAY NOT BE DISCLOSED WITHOUT THE PRIOR WRITTEN CONSENT OF KARL SUSS.

REVISIONS				
ZONE	REV.	DESCRIPTION	DATE	APPROVAL

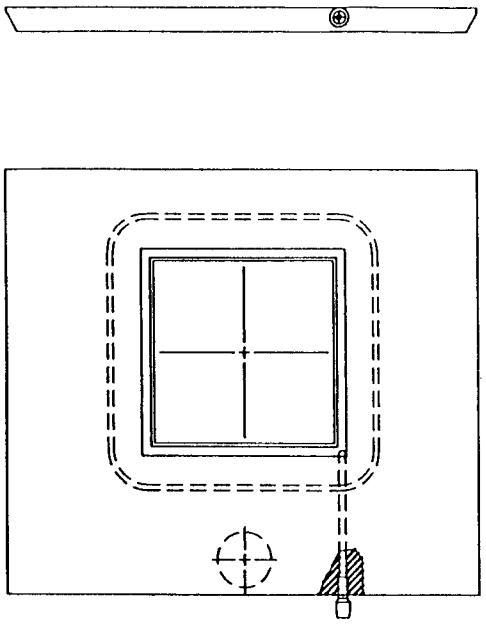

PART NUMBER	A	B	C
20001266 M 2.5"x2.5" □2"	53	55	59
50001213 M 3"x3" □2"	53	55	59
50000659 M 4"x4" □1.5"	40	92	96
50000489 M 4"x4" □2"	53	92	96
300MH003 M 4"x4" □3"	78.5	92	96

FIRST ANGLE PROJECTION

UNLESS OTHERWISE SPECIFIED DIMENSIONS ARE IN MILLIMETERS
TOLERANCES ARE :
DECIMALS XX ±.2
ANGLES ±

APPROVALS	DATE
DRAWN	9/87
CHECKED	
ISSUED	

MATERIAL: COLLEX / L4034 EDV81003507

NEXT ASSEMBLY | USED ON | FINISH

KARL SUSS

DRAWING NAME: MJB3 MASKHOLDER

SIZE: C | DRAWING NO.: SQUARE MASTER

SCALE: 1:1 | SHEET 1/1 | REV.00

THIS DRAWING CONTAINS INFORMATION WHICH IS THE PROPRIETARY PROPERTY OF KARL SUSS.IT IS RECEIVED IN CONFIDENCE AND ITS CONTENTS MAY NOT BE DISCLOSED WITHOUT THE PRIOR WRITTEN CONSENT OF KARL SUSS.

REVISIONS				
ZONE	REV.	DESCRIPTION	DATE	APPROVAL

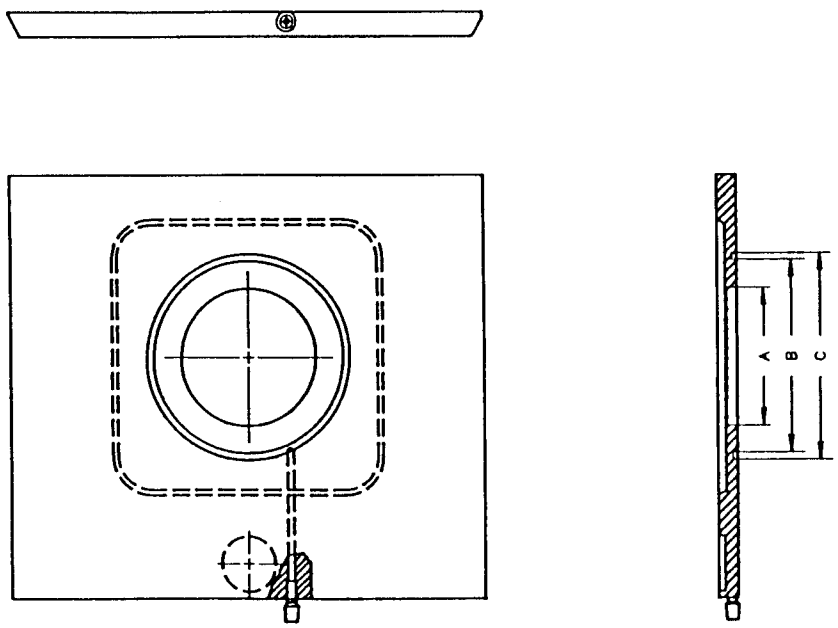

PART NUMBER	A	B	C
20001223 M 2"x2" W1.5"	40.0	42.5	46.5
20001231 M 2.5"x2.5" W1.5"	40.0	56.0	60.0
50000063 M 2.5"x2.5" W2"	53.0	55.5	59.5
50000586 M 3"x3" W2.5"	66.0	68.0	72.0
50000071 M 3"x3" W1"	27.0	33.0 68.5	37.0 72.5
20001312 M 3"x3" W2"	53.0	55.5	59.5
20001274 M 3.5"x3.5" W3"	79.0	81.5	85.5
22002464 M 4"x4" W2"	53.0	68.0	72.0
20001282 M 4"x4" W3"	79.0	84.0	88.0

FIRST ANGLE PROJECTION

UNLESS OTHERWISE SPECIFIED DIMENSIONS ARE IN MILLIMETERS
TOLERANCES ARE :
DECIMALS XX ±.2 ANGLES ±

APPROVALS	DATE
DRAWN	9/87
CHECKED	
ISSUED	

MATERIAL
COLLEX / L4834
EDV01883507

FINISH

NEXT ASSEMBLY | USED ON

KARL SUSS

DRAWING NAME: MJB3 MASKHOLDER

SIZE C | DRAWING NO. ROUND MASTER

SCALE 1:1 | SHEET 1/1 | REV.00

Appendix A

SUSS MJB 3 IR
MASK ALIGNER

Parts Identification

P/N 080AA010
0788

Karl Suss

WARNING: Ensure that the IR controller is off prior to ignition of lamp power supply.

OPERATING PROCEDURE:

1. After ignition of the lamp power supply, the IR controller can be turned on. The power switch is located in the rear of the controller. A red "power-on" lamp is on the front of the controller, and is on when the controller is on.

   NOTE: The IR controller must be on in order for the MJB 3 system to operate.

2. Select manual or automatic mode using the switch on the front of the controller.

   a. Manual mode = MJB 3 operation without IR.

   b. Automatic mode = MJB 3 operation with IR.

3. Adjust microscope illumination with the left knob on the front of the IR controller.

4. With the IR lamp located under the special IR chuck system (controller in automatic mode), the lamp is activated by depressing the foot switch.

5. Adjust IR lamp illumination with the right knob on the front of the IR controller.

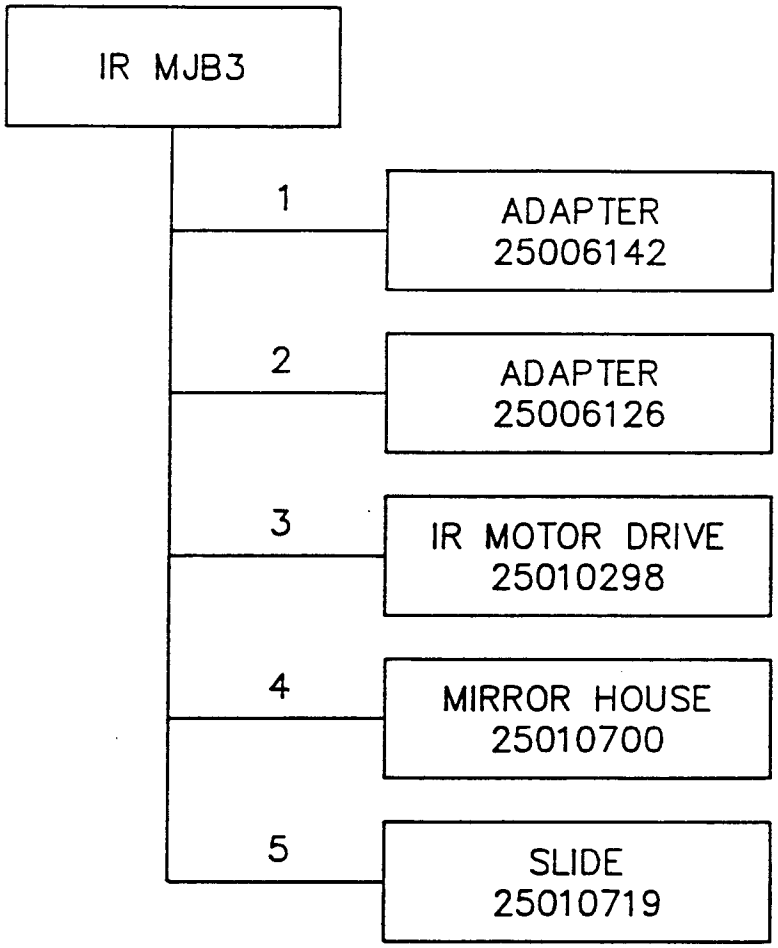
IR MJB3
1
ADAPTER
25006142
2
ADAPTER
25006126
3
IR MOTOR DRIVE
25010298
4
MIRROR HOUSE
25010700
5
SLIDE
25010719

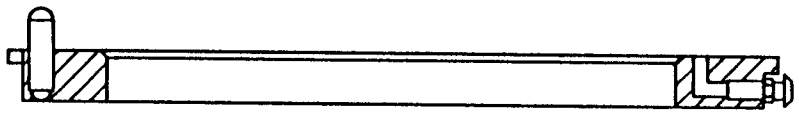

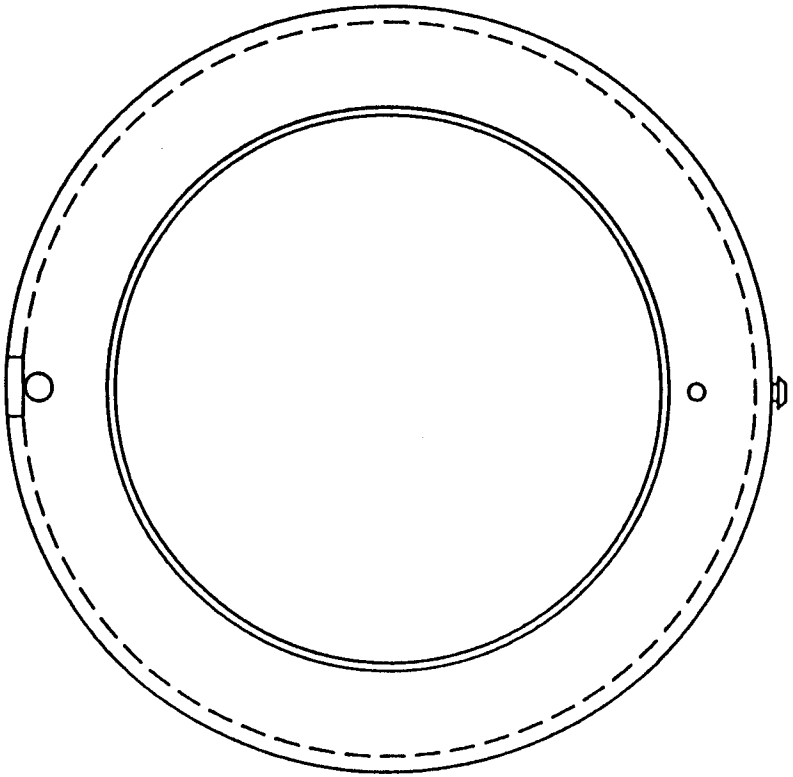

NO.	PART NUMBER	DESCRIPTION
1	25006142	ADAPTER

KARL SUSS		Pg. 1
ADAPTER		
DWG. NO.: 25006142	REV. 00	

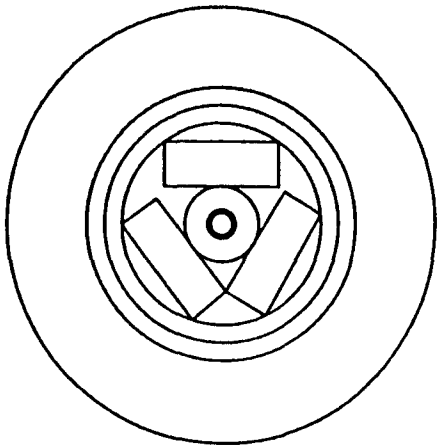

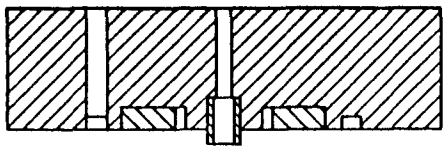

NO.	PART NUMBER	DESCRIPTION
1	25006126	ADAPTER

KARL SUSS		
ADAPTER		
DWG. NO.: 25006126	REV. 00	

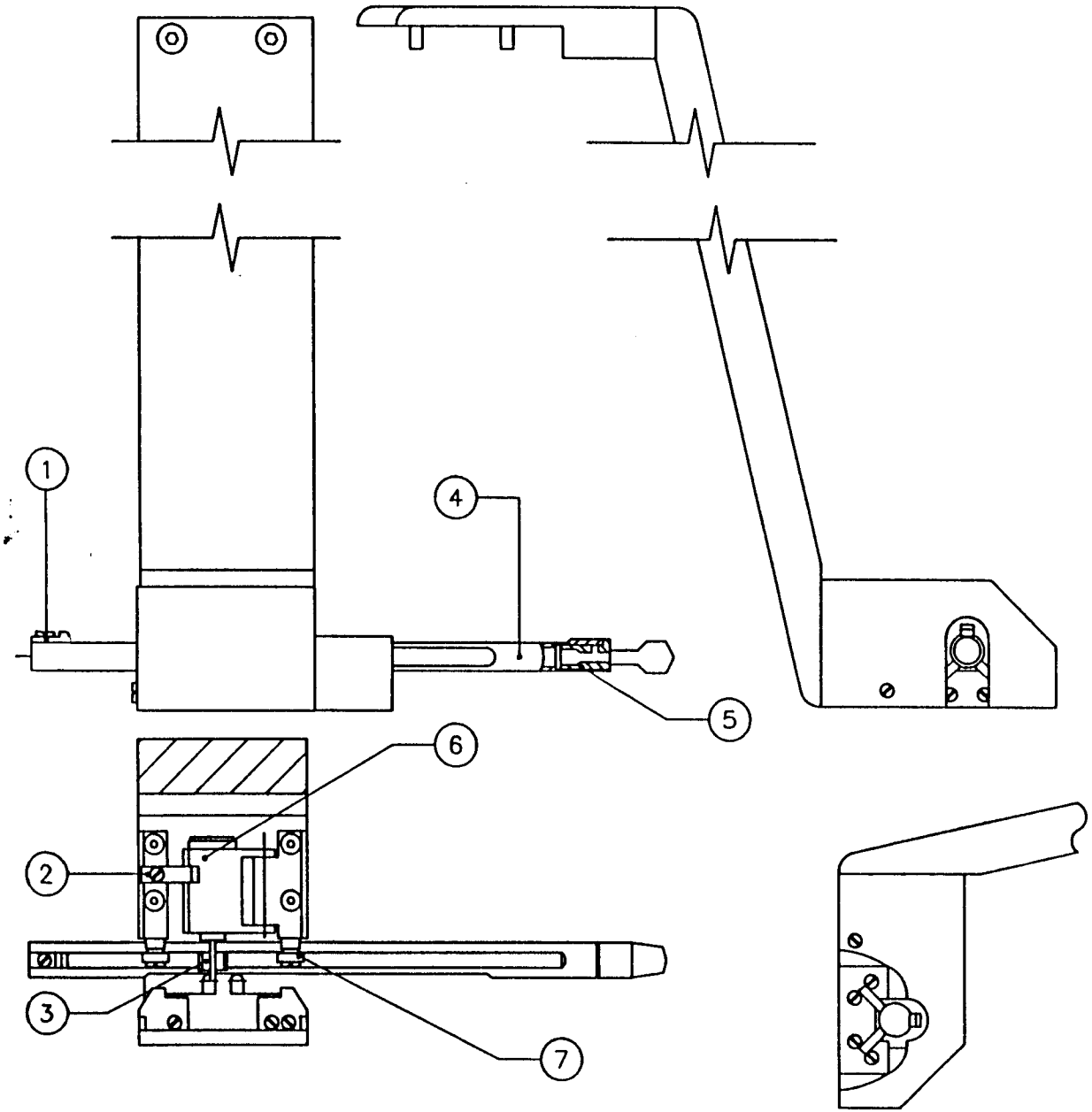

NO.	PART NUMBER	DESCRIPTION
1	30052785	STOP
2	30093678	SPRING
3	300522890	WHEEL
	70500150 (2x)	O RING
4	30052874	LAMP ARM
5	30052882	NYLON LAMP HOLDER
	61021431 (2x)	CONNECTORS
6	65000188	MOTOR
7	72501634	BEARING

KARL SUSS		Pg. 3
IR MOTOR DRIVE		
DWG. NO.: 25010298	REV. 00	

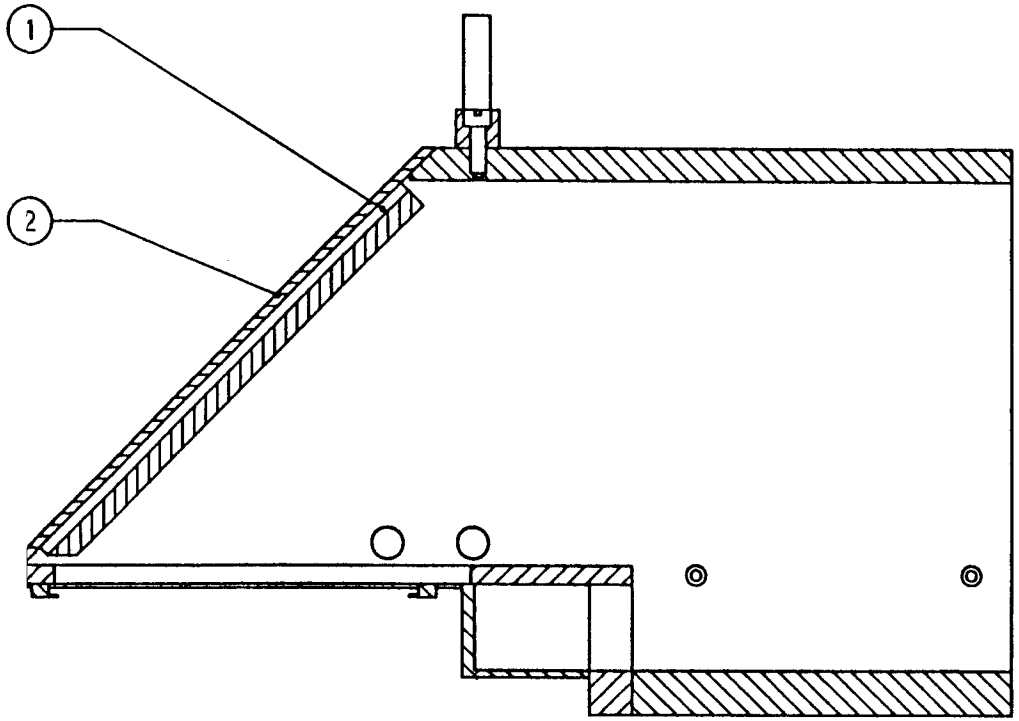

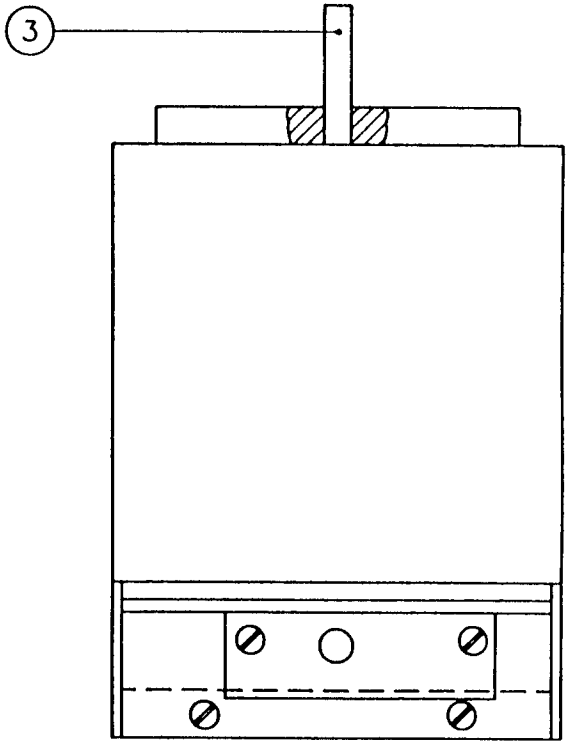

NO.	PART NUMBER	DESCRIPTION
1	60501162	SURFACE MIRROR
2	75000024 (6x)	O RING
3	72000570	PIN 6x28

KARL SUSS		Pg. 4
MIRROR HOUSE		
DWG. NO.: 25010700	REV. 00	

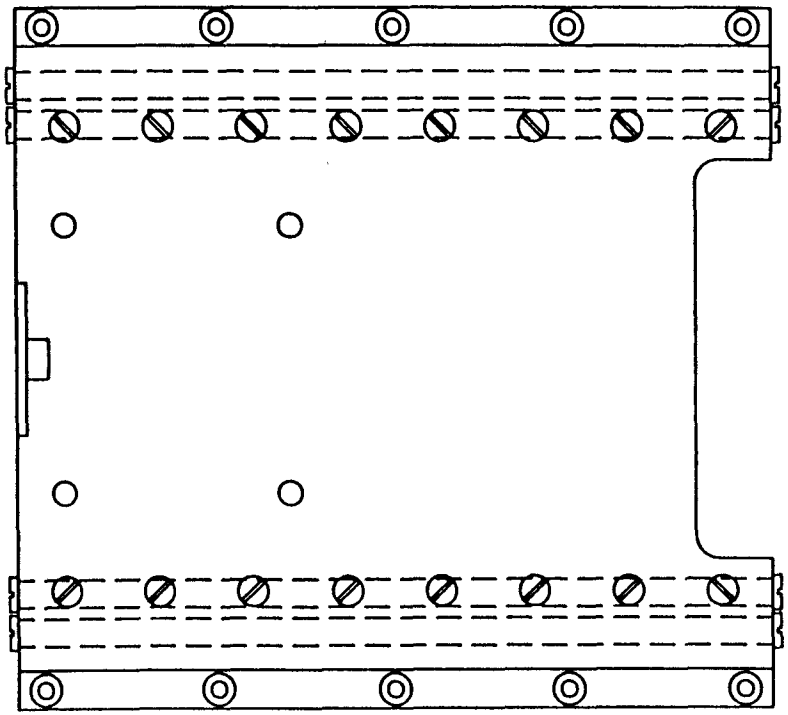

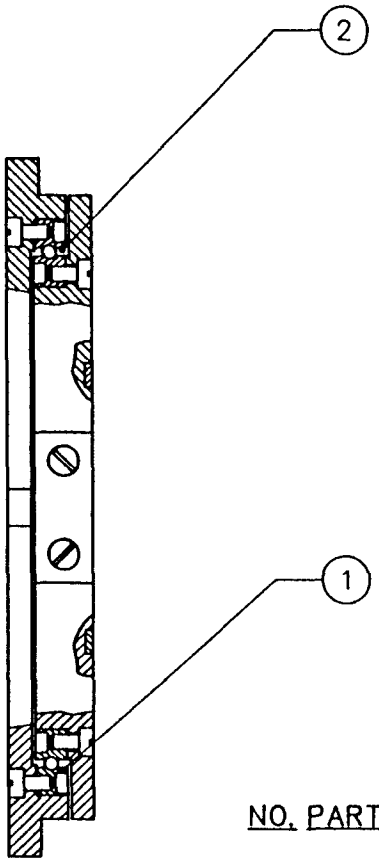

NO.	PART NUMBER	DESCRIPTION
1	60007796 (4x)	BALL GUIDE
2	60007761 (2x)	BALL CAGE

KARL SUSS		Pg. 5
SLIDE		
DWG. NO.: 25010719	REV. 00	

Additional Information for MJB 3 Service Manual

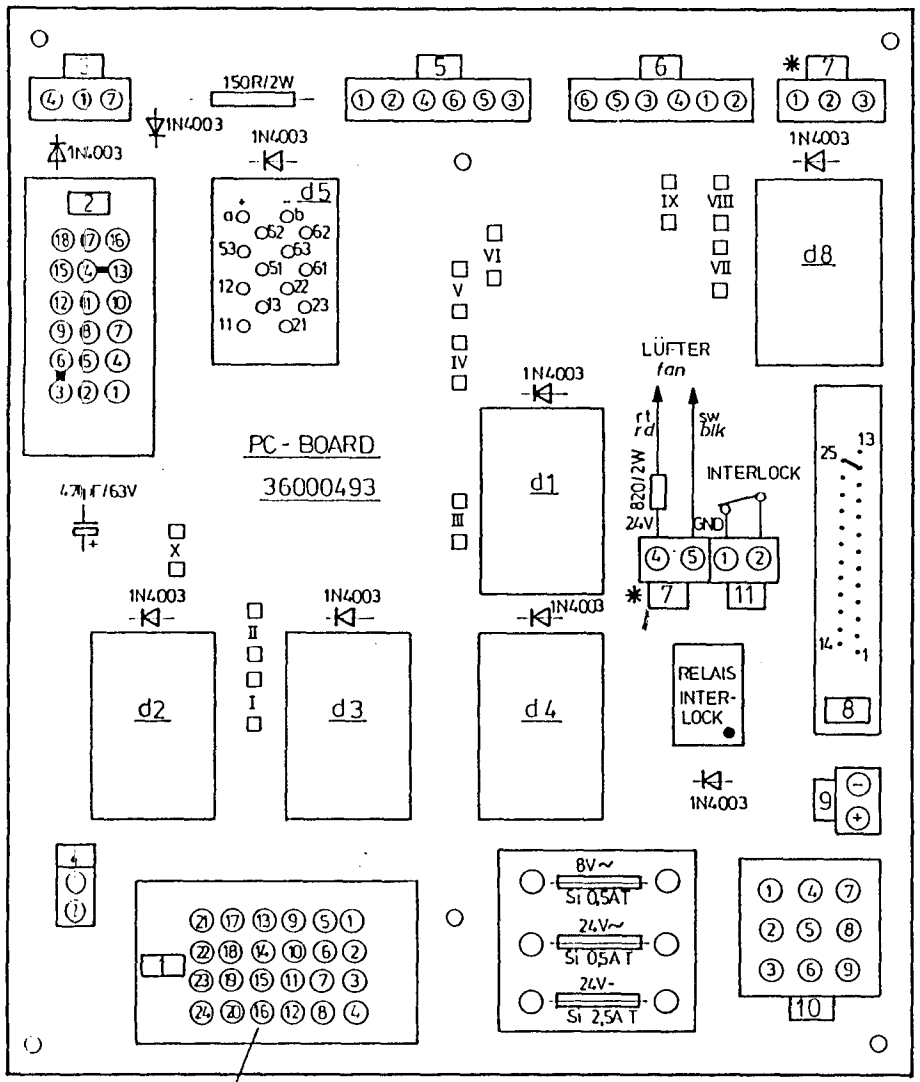

Brücke Pin 14-16 , Lötseite
jumper , soldering side

* IR SC INTERFACE

Steckverbindung *connection*	Baugruppe	*assembly*
1	Frontplatte	*frontplate*
2	Pneumatik	*pneumatic*
3	Manipulatorgriff	*manipulator lever*
4	Schleifkontakt am Mikroskop	*sliding contact at the microscope*
5	Tisch Z-Achse	*stage z-direction*
6	Lampenhaus	*lamphouse*
7	IR SC Schnittstelle	*interface*
8	Lichtintegrator / Zeituhr	*lightintegrator / timer*
9	Fotoelement	*uv-sensor*
10	Spannungsversorgung	*voltage supply*
11	Interlock	*interlock*

Steckverbindung *connection*	Pin	Drahtfarbe	*wire color*	Anschluß *contact*	
3	1	ws gn	*wht grn*		
3	4	ws	*wht*		
3	7	ws br	*wht brn*		
4	1	ws rs	*wht pk*	—C 1	
4	2	bl sw	*blu blk*	—C 7	
5	1	ws	*wht*		
5	2	bl	*blu*		
5	3	gn rs	*grn pk*		
5	4	vio rt	*vio rd*		
5	5	bl ws	*blu wht*		
5	6	br sw	*brn blk*		
6	1	gn rt	*grn rd*		
6	2	gn sw	*grn blk*		
6	3	br ge	*brn yel*		
6	4	br gr	*brn gry*		
6	5	gn gr	*grn gry*		
6	6	ge	*yel*		
7	1	gn	*grn*	—C 3	Rückwand *rear panel*
7	2	ws	*wht*	—C 2	
7	3	ge	*yel*	—C 4	
7	4	rt	*rd*	24V —C 1	
7	5	sw	*blk*	GND —C 5	
10	1/4	ge	*yel*	8V~	
10	2/5	gn	*grn*	24V~	
10	3	rt	*rd*	24V-	
10	6				
10	7	br	*brn*	N2 - Signal	
10	9	ws	*wht*	GND	
9	+	rt sw	*rd blk*	UV-Sensor	
9	-	ws sw	*wht blk*	UV-Sensor	
11	1	ge sw	*yel blk*	—C 1 Interlock	Rückwand *rear panel*
11	2	ge rt	*yel rd*	—C 2 Interlock	

987

			PC-Board Relaissteuerung HP/ST 26000199
			03000125
REIL	09/87	WE.	
INDEX	TAG	NAME	MJB 3 HP/ST

Karl Süss KG GMBH & CO.
8046 GARCHING b. MÜNCHEN

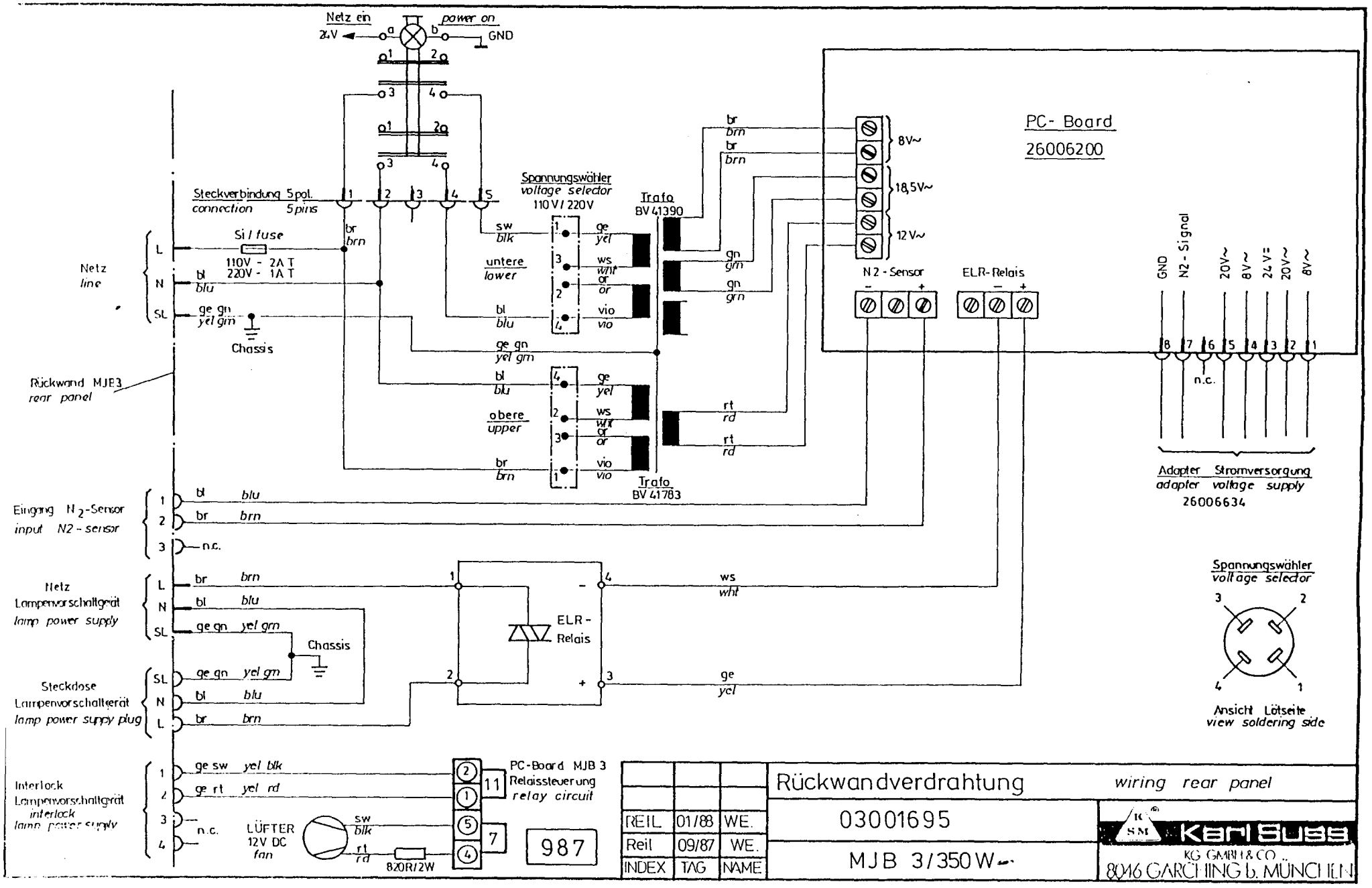
Netz ein
power on
24V
GND
Steckverbindung 5pol.
connection 5pins
Spannungswähler
voltage selector
110V / 220V
Trafo
BV 41390
Trafo
BV 41783
PC- Board
26006200
8V~
18,5V~
12V~
N2 - Sensor
ELR-Relais
GND
N2 - Signal
20V~
8V~
24V=
20V~
8V~
n.c.
Adapter Stromversorgung
adapter voltage supply
26006634
Si / fuse
110V - 2A T
220V - 1A T
Netz
line
Chassis
untere
lower
obere
upper
Rückwand MJB3
rear panel
Eingang N2-Sensor
input N2 - sensor
Netz
Lampenvorschaltgerät
lamp power supply
Steckdose
Lampenvorschaltgerät
lamp power supply plug
ELR - Relais
Spannungswähler
voltage selector
Ansicht Lötseite
view soldering side
Interlock
Lampenvorschaltgerät
interlock
lamp power supply
n.c.
LÜFTER
12V DC
fan
820R/2W
PC-Board MJB 3
Relaissteuerung
relay circuit
987
Rückwandverdrahtung
wiring rear panel
03001695
MJB 3/350W
REIL 01/88 WE.
Reil 09/87 WE.
INDEX TAG NAME
KG GMBH & CO
8046 GARCHING b. MÜNCHEN

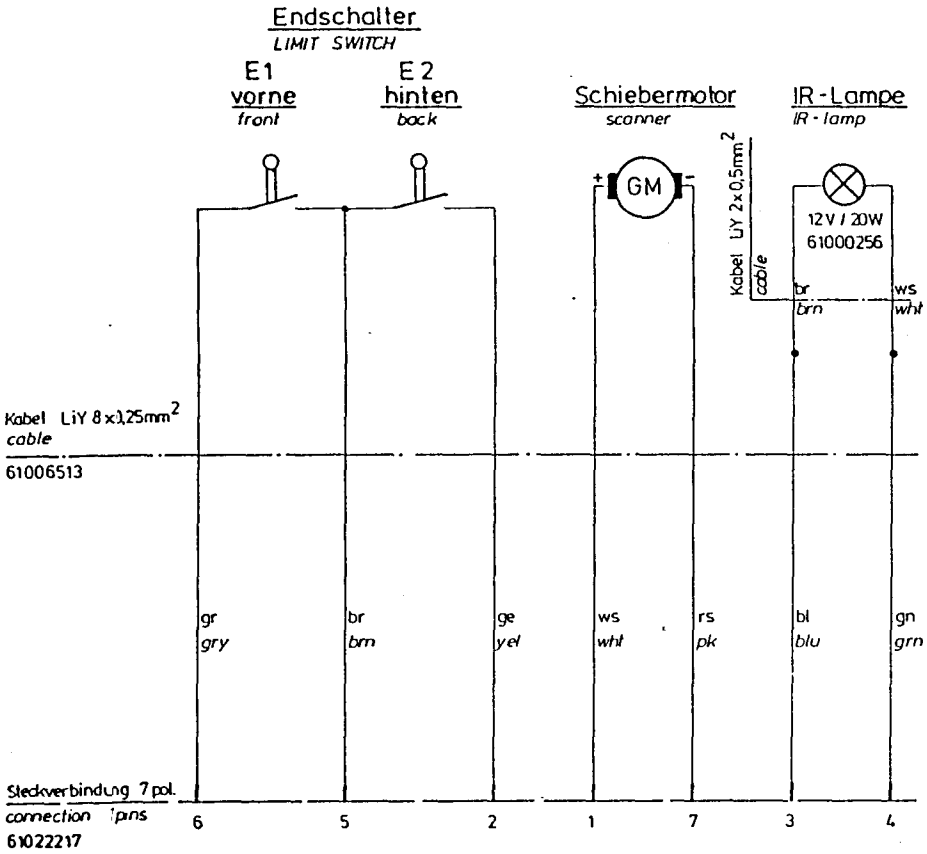

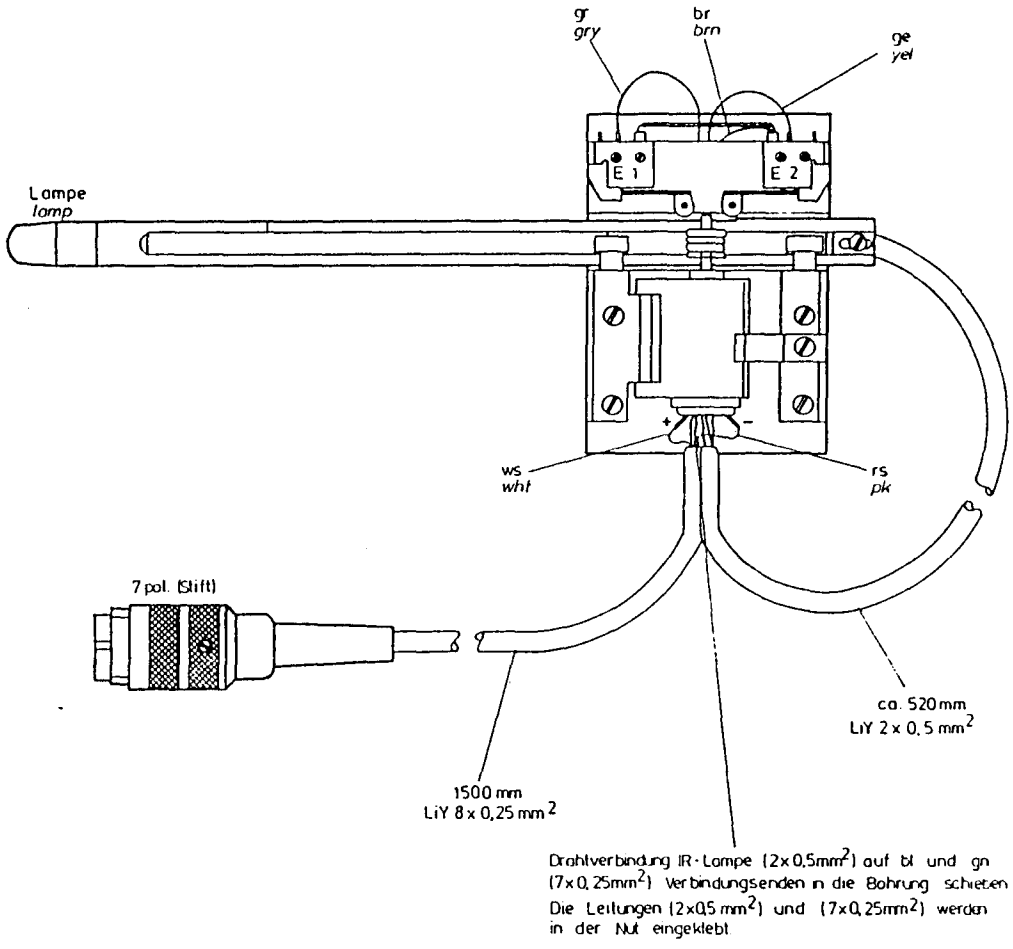

Drahtverbindung IR-Lampe ($2 \times 0{,}5 mm^2$) auf bl und gn ($7 \times 0{,}25 mm^2$) Verbindungsenden in die Bohrung schieben
Die Leitungen ($2 \times 0{,}5 mm^2$) und ($7 \times 0{,}25 mm^2$) werden in der Nut eingeklebt

			VERDRAHTUNG SCHIEBERMOTOR IR SC	
			WIRING SCANNER IR SC	
				Karl Süss KG GMBH & CO 8046 GARCHING b. MÜNCHEN
REIL	09/88	WE	03003612	MJB 3 IR SC
GEPR	TAG	NAME		

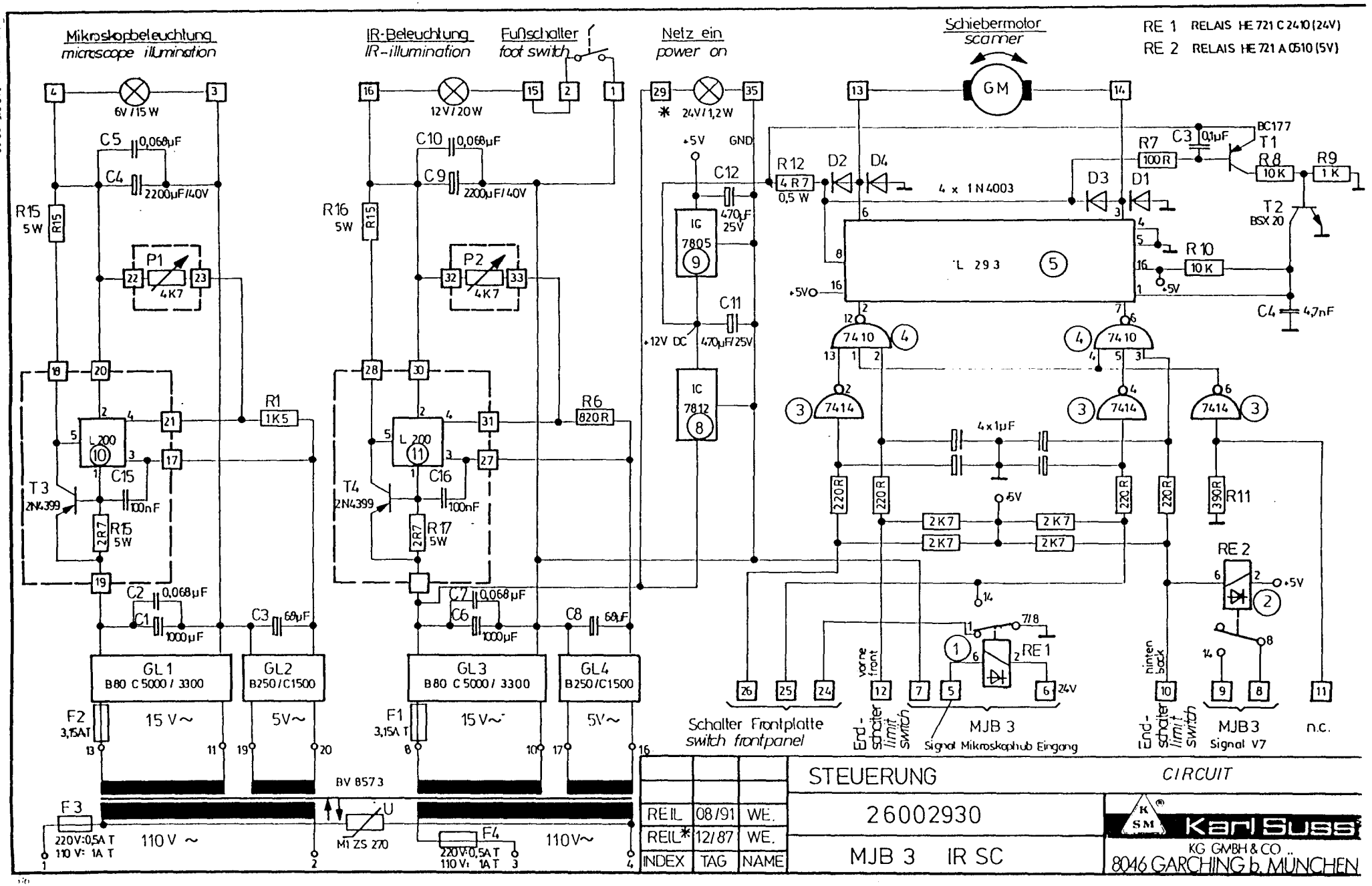

RE 1 RELAIS HE 721 C 2410 (24V)
RE 2 RELAIS HE 721 A 0510 (5V)

REIL	08/91	WE.	STEUERUNG CIRCUIT
REIL*	12/87	WE.	26002930
INDEX	TAG	NAME	MJB 3 IR SC

Karl Suss KG GMBH & CO.
8046 GARCHING b. MÜNCHEN

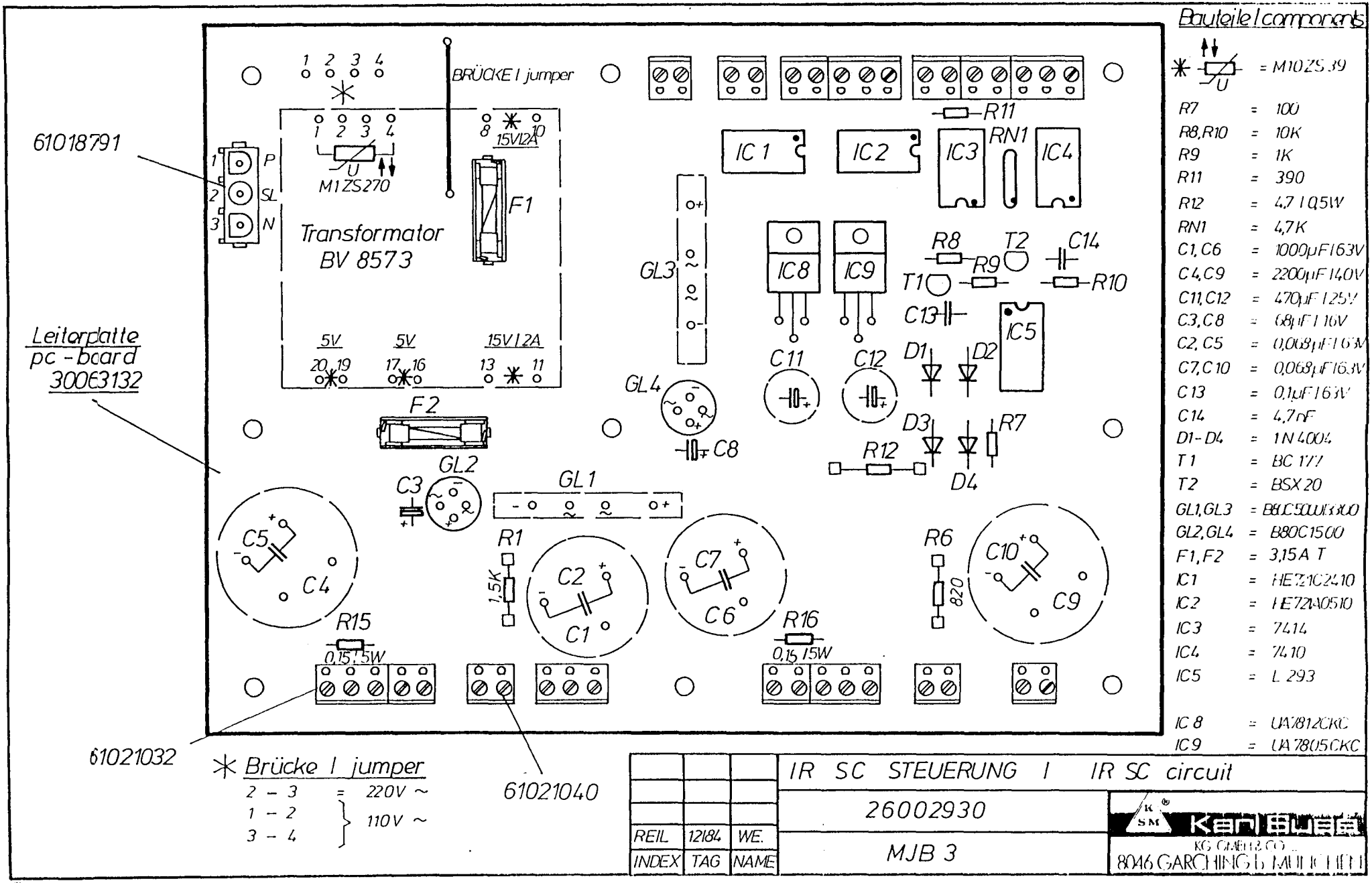

Bauteile / components

	=	M10ZS39
R7	=	100
R8,R10	=	10K
R9	=	1K
R11	=	390
R12	=	4,7 / 0,5W
RN1	=	4,7K
C1, C6	=	1000µF/63V
C4, C9	=	2200µF/40V
C11, C12	=	470µF/25V
C3, C8	=	68µF/16V
C2, C5	=	0,068µF/63V
C7, C10	=	0,068µF/63V
C13	=	0,1µF/63V
C14	=	4,7nF
D1 - D4	=	1N4004
T1	=	BC177
T2	=	BSX20
GL1, GL3	=	B80C5000/3300
GL2, GL4	=	B80C1500
F1, F2	=	3,15A T
IC1	=	HEF21C2410
IC2	=	HEF2A0510
IC3	=	7414
IC4	=	7410
IC5	=	L293
IC8	=	UA7812CKC
IC9	=	UA7805CKC

✳ Brücke I jumper

2 - 3	=	220V ~
1 - 2	}	110V ~
3 - 4	}	

REIL	12184	WE.
INDEX	TAG	NAME

IR SC STEUERUNG I IR SC circuit

26002930

MJB 3

KG GMBH & CO.
8046 GARCHING b. MÜNCHEN

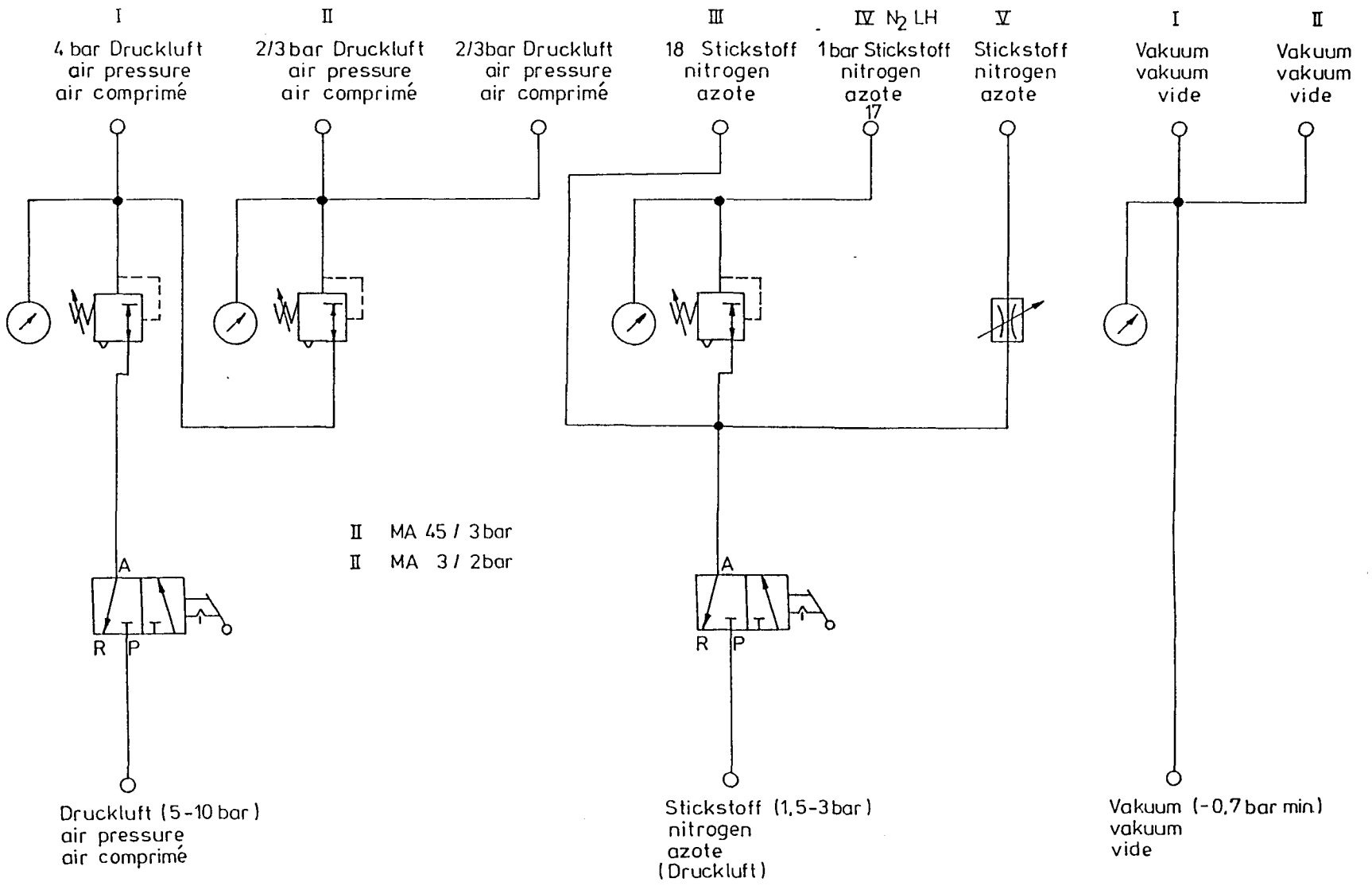

Ausgabe	Änderung	Tag	Name
		02/88	WE.
		11/86	We.
		21.03.84	Ku.

MANOMETER-BOX für MJB3 und MJB45

PNEUMATIK-PLAN

Karl Suss KG GMBH & CO. 8046 GARCHING b. MÜNCHEN

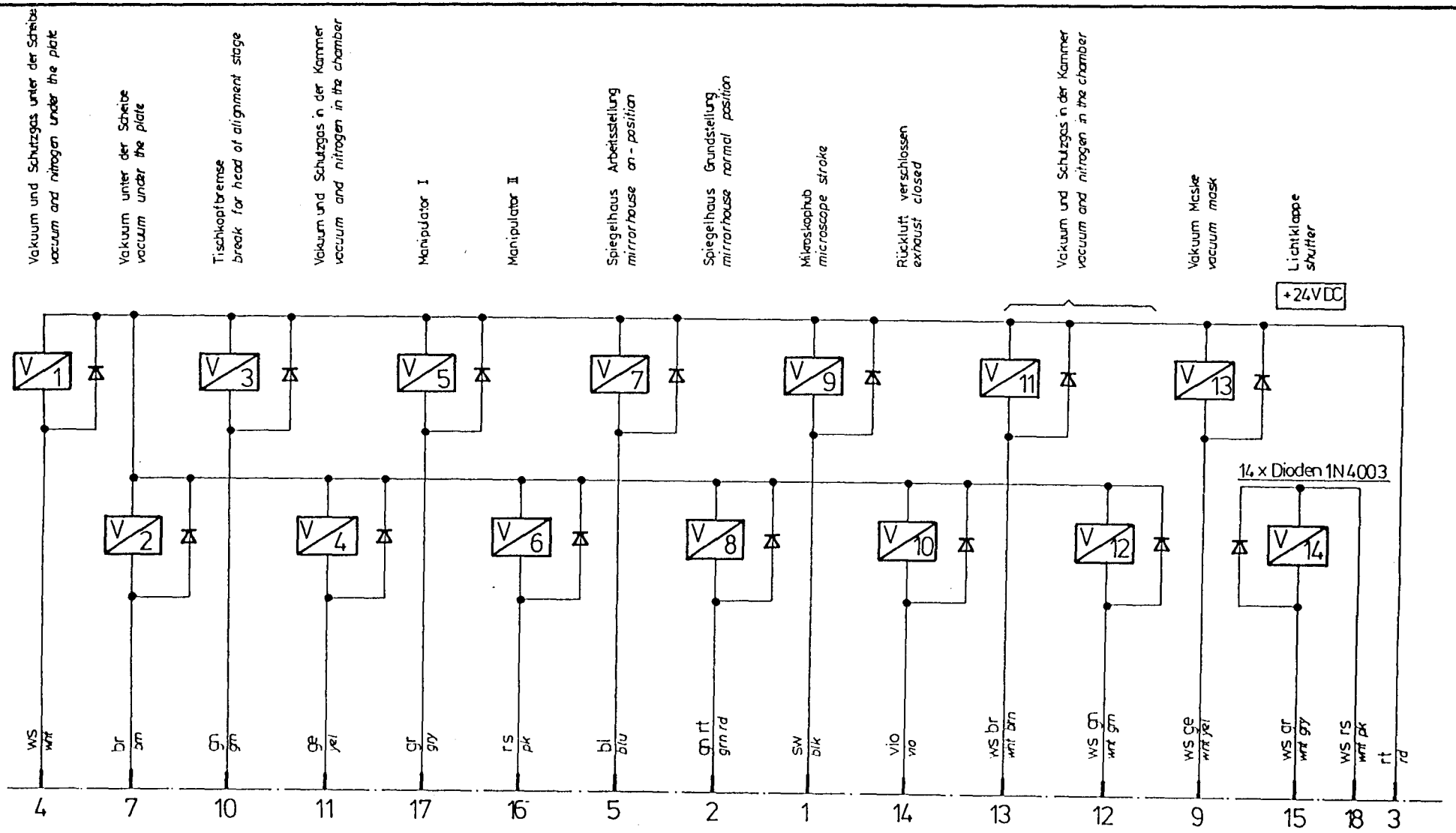

Steckverbindung 2, 18 pol.
connection 2 18 pins
61017418

Schnittstelle IR SC
Interface IR SC

INDEX	TAG	NAME
REIL	04/92	WE.
REIL	12/91	WE.
AL. ALI	07/89	WE.
REIL	11/87	WE

PNEUMATIK *PNEUMATIK*

HP/ST IR SC

MJB 3

Karl Suss
KG GMBH & CO.
8046 GARCHING b. MÜNCHEN

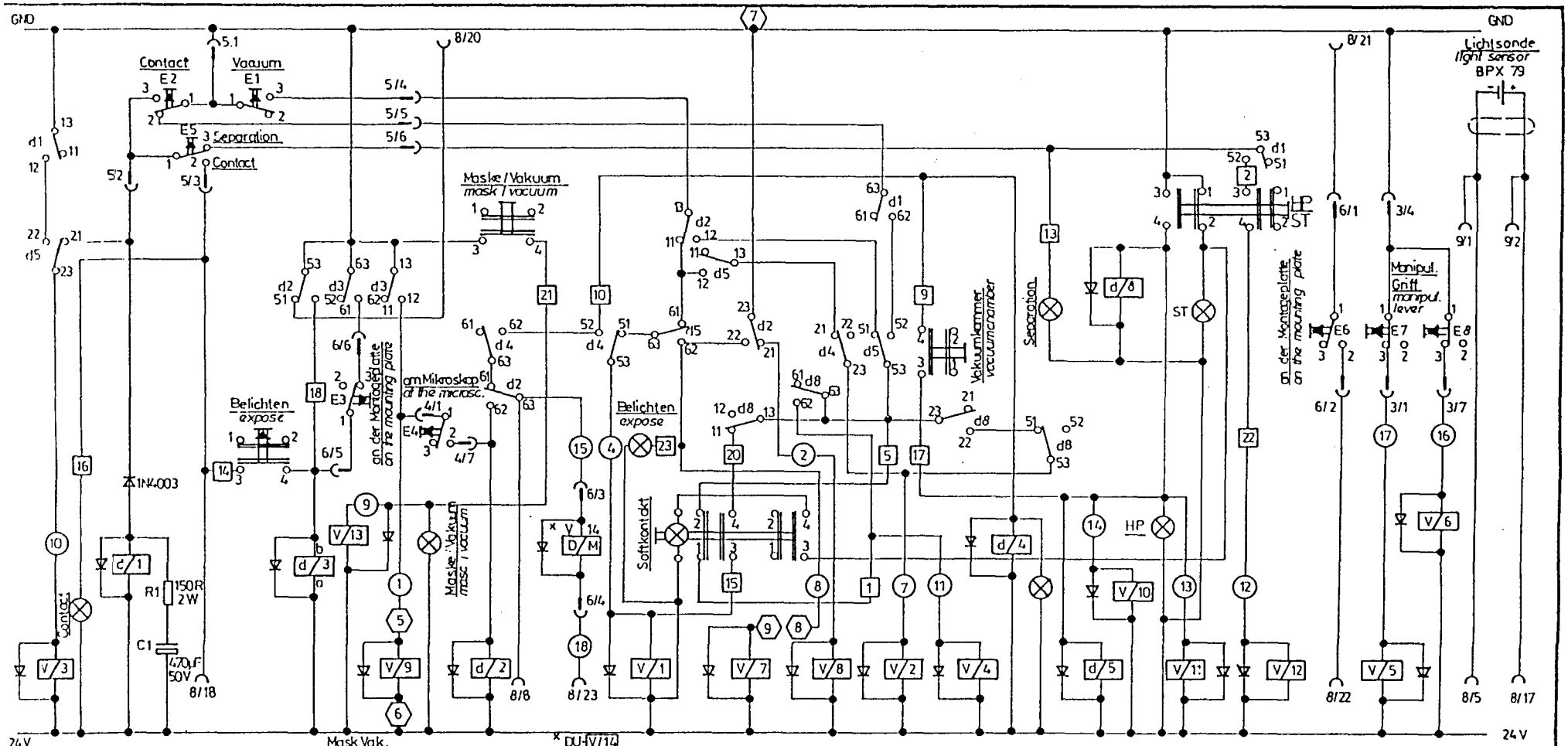

ST 1	Frontplatte — *frontpanel*
ST 2	Pneumatik — *pneumatic*
ST 3	Manipulatorgriff — *manipulator lever*
ST 4	Schleifkontakt am Mikroskop — *sliding contact at the microscope*
ST 5	Tisch Z-Achse — *stage z-axis*
ST 6	Lampenhaus — *lamphouse*
ST 8	Integrator / Zeitrelais — *integrator / timer*
TR 1	Zeitrelais — *time relay*
ST 9	Fotoelement BPX79 — *light sensor BPX 79*

△ STANDARD-FUNKTION

✱ HP-FUNKTION

(5) – (9) Schnittstelle IR-SC *interface IR-SC*

REIL	11/87	WE.
INDEX	TAG	NAME

Schaltplan — *DIAGRAM*

HP/ST

MJB 3 IR-SC

Karl Süss KG GMBH & CO.
8046 GARCHING b. MÜNCHEN

LAMPENHAUS
lamphouse

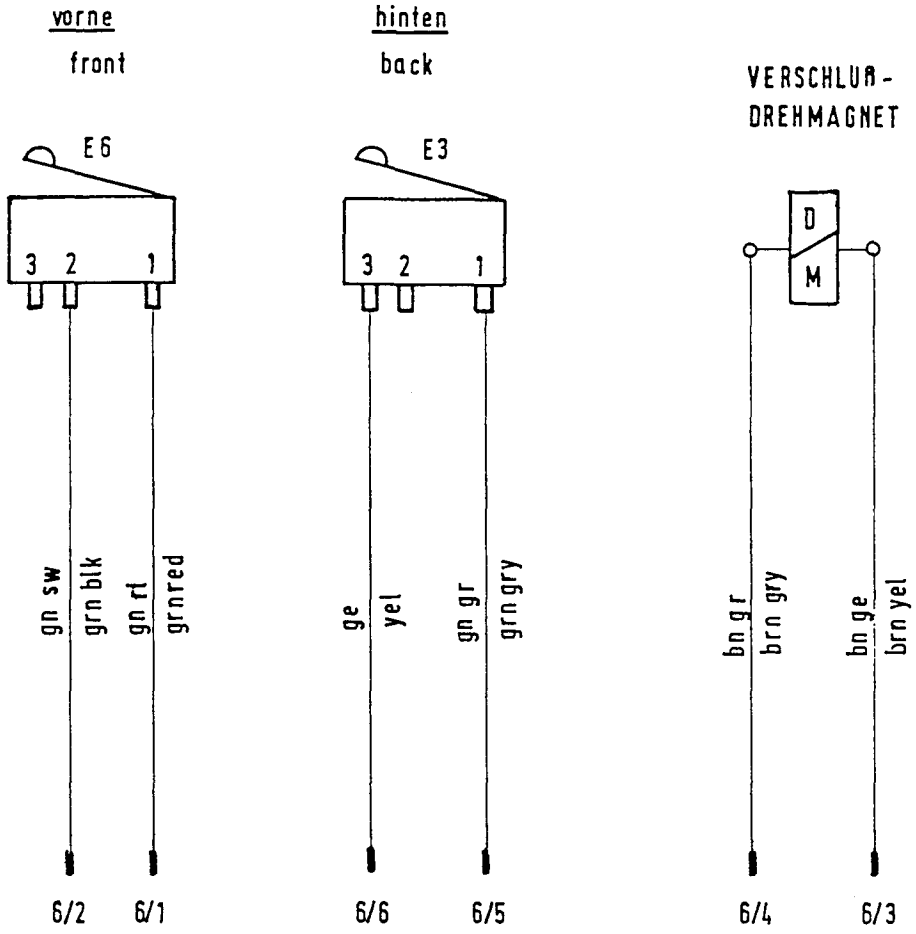

MIT MIKROSKOPHUB
with microscop stroke

			LAMPENHAUSVERDRAHTUNG	lamphouse wiring
REIL	9/83	WE	STANDARD / HP	
REIL	2.83	Wa,		
INDEX	TAG	NAME	MJB 3	

Karl Süss KG

Lampenhaus vorne
lamp house front

E 6

61005983

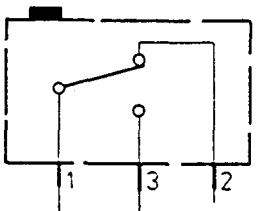

gn rt
grn rd

gn sw
grn blk

6/1 6/2

Lampenhaus hinten
lamp house back

E 3

61005983

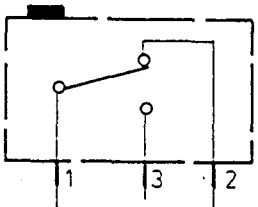

gn gr
grn gry

ge
yel

6/5 6/6

Verschluß - Drehmagnet
maget

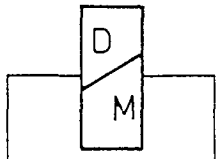

br gr
brn gry

br ge
brn yel

6/4 6/3

②

			LAMPENHAUSVERDRAHTUNG	mit Mikroskophub
			LAMP HOUSE WIRING	*WITH MICROSCOPE LIFT*
REIL	12/91	WE.	03009858	MJB 3

Karl Suss
KG GMBH & CO.
8046 GARCHING b. MÜNCHEN

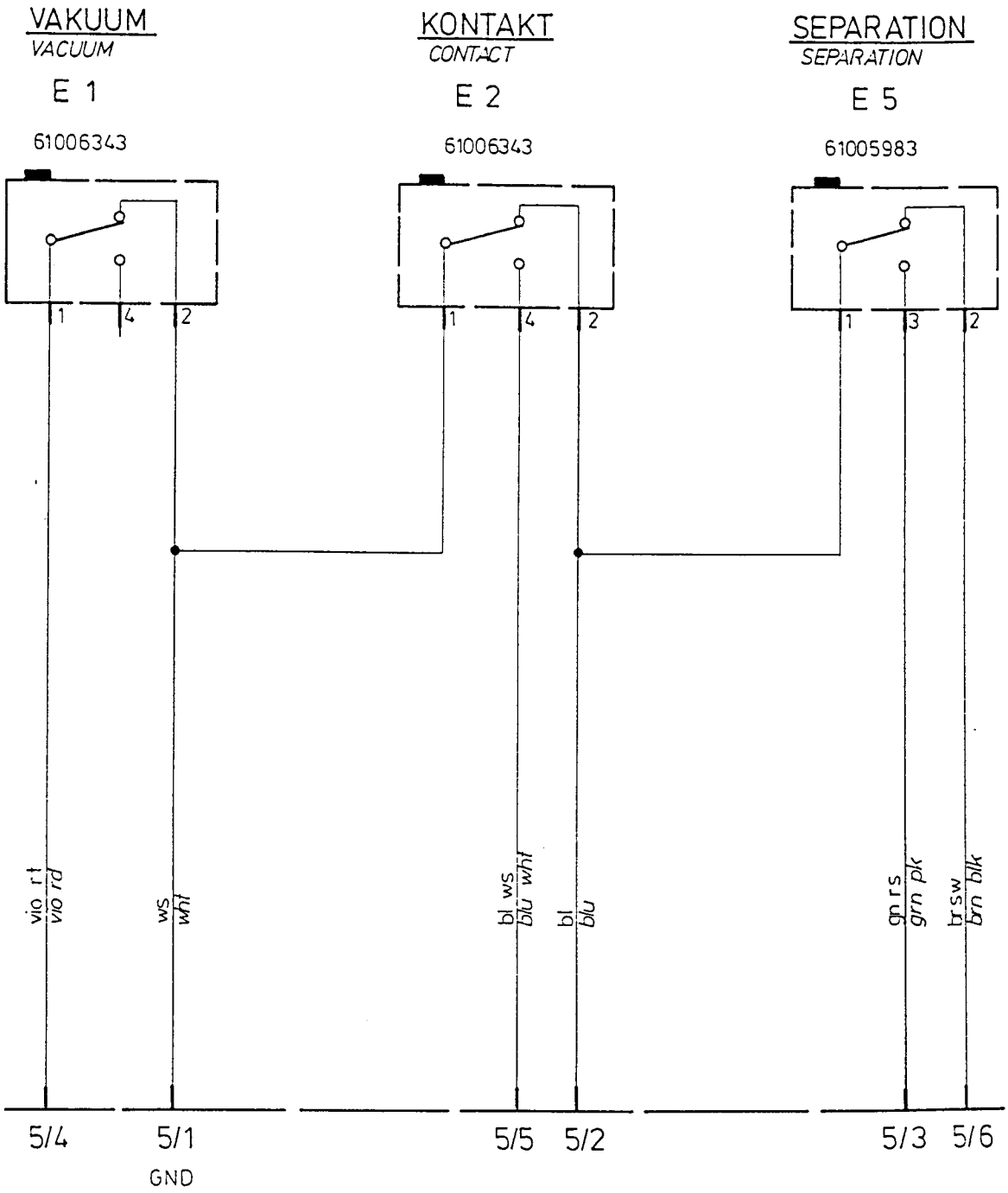

			TISCHVERDRAHTUNG		
			STAGE WIRING		
				HP/ST	Karl Süss KG GMBH & CO.
REIL	12/91	WE.	0300987/	M JB 3	

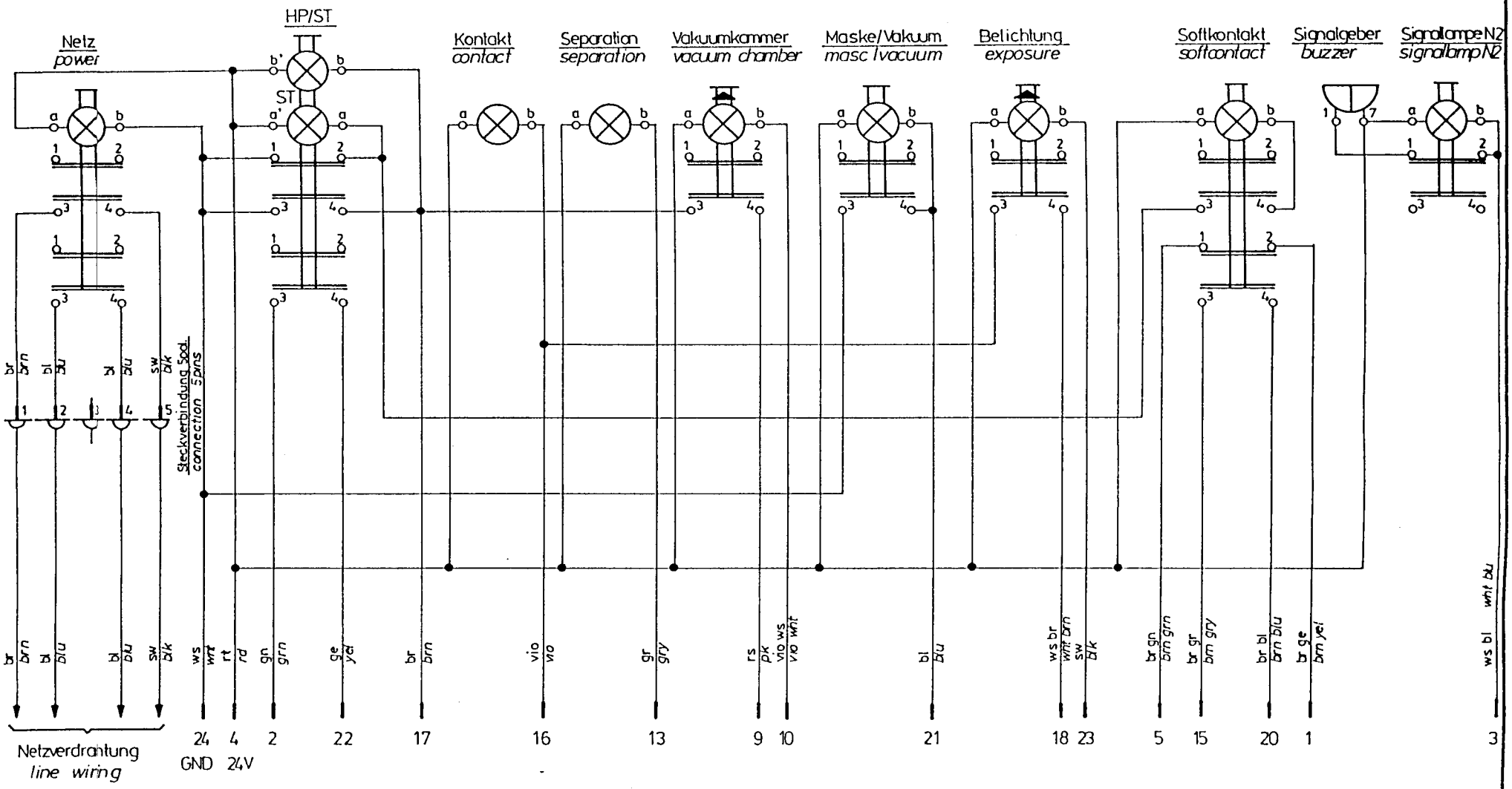

Steckverbindung Nr. 1 (24 pol.)
connection no. 1 (24 pins)
61017426

987

			Frontplatte *frontplate*
			HP / ST
REIL	09/87	WE.	MJB 3
INDEX	TAG	NAME	

Karl Suss KG GMBH & CO.
8046 GARCHING b. MÜNCHEN

MIKROSCHALTER
micro switch

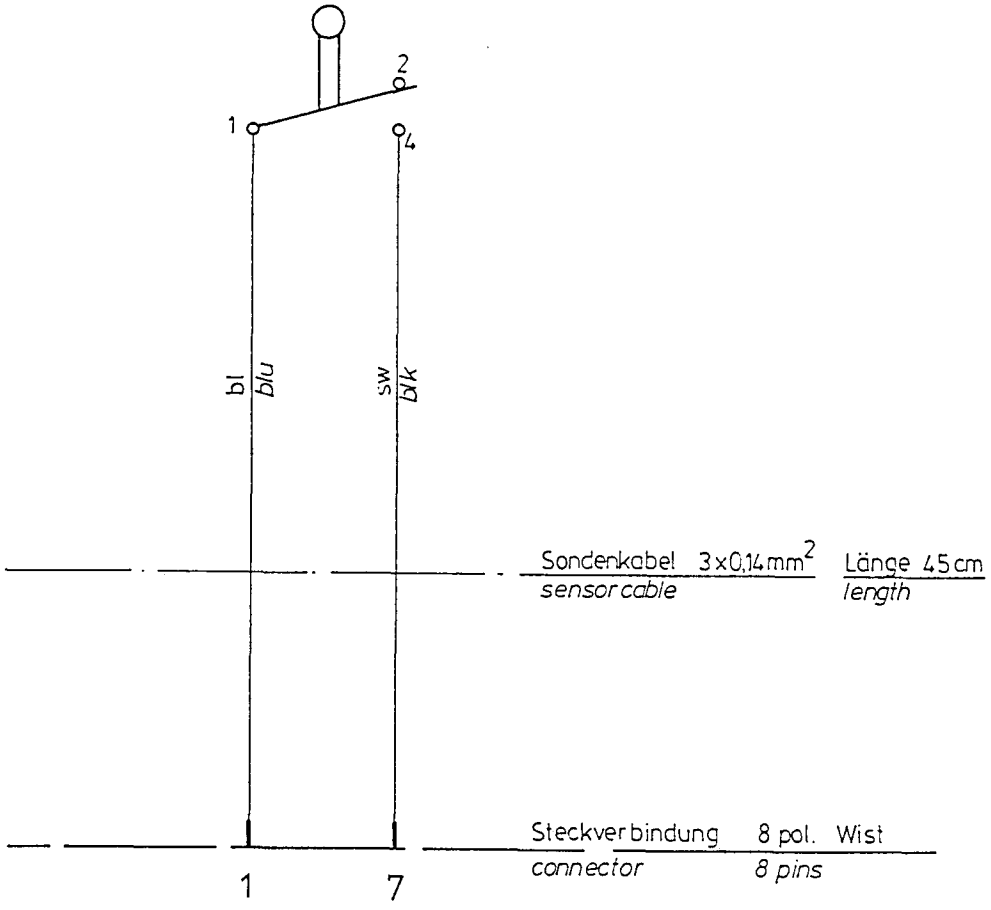

MIKROSCHALTER
micro switch

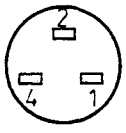

Ansicht Lötseite
view soldering side

			MIKROSKOPHUB	microscope stroke
				K S M Karl Süss
REIL	03/87	WE.	MA 3	KG GMBH & CO 8046 GARCHING b. MÜNCHEN
INDEX	TAG	NAME		

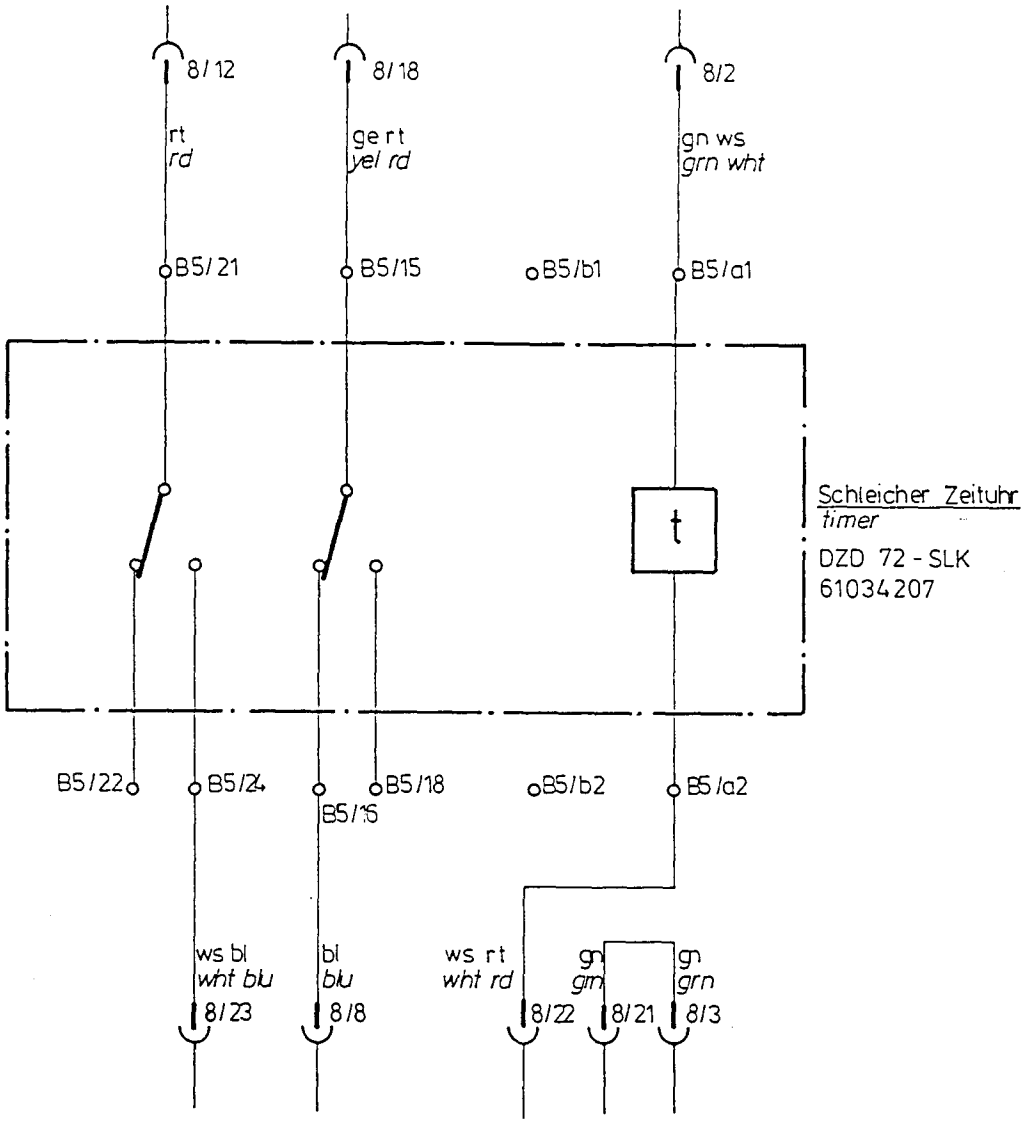

STECKVERBINDUNG 8 Cannon DB 25P 61002267

Schleicher - Sockel B5

timer connector B5

			ELEKTR. ZEITUHR (DZD 72 - SLK)	
			ELECTR. TIMER	
HILD.	02/89	WE.	0300/112	M IB 3

KSM Karl Suss KG GMBH & CO 8046 GARCHING b. MÜNCHEN

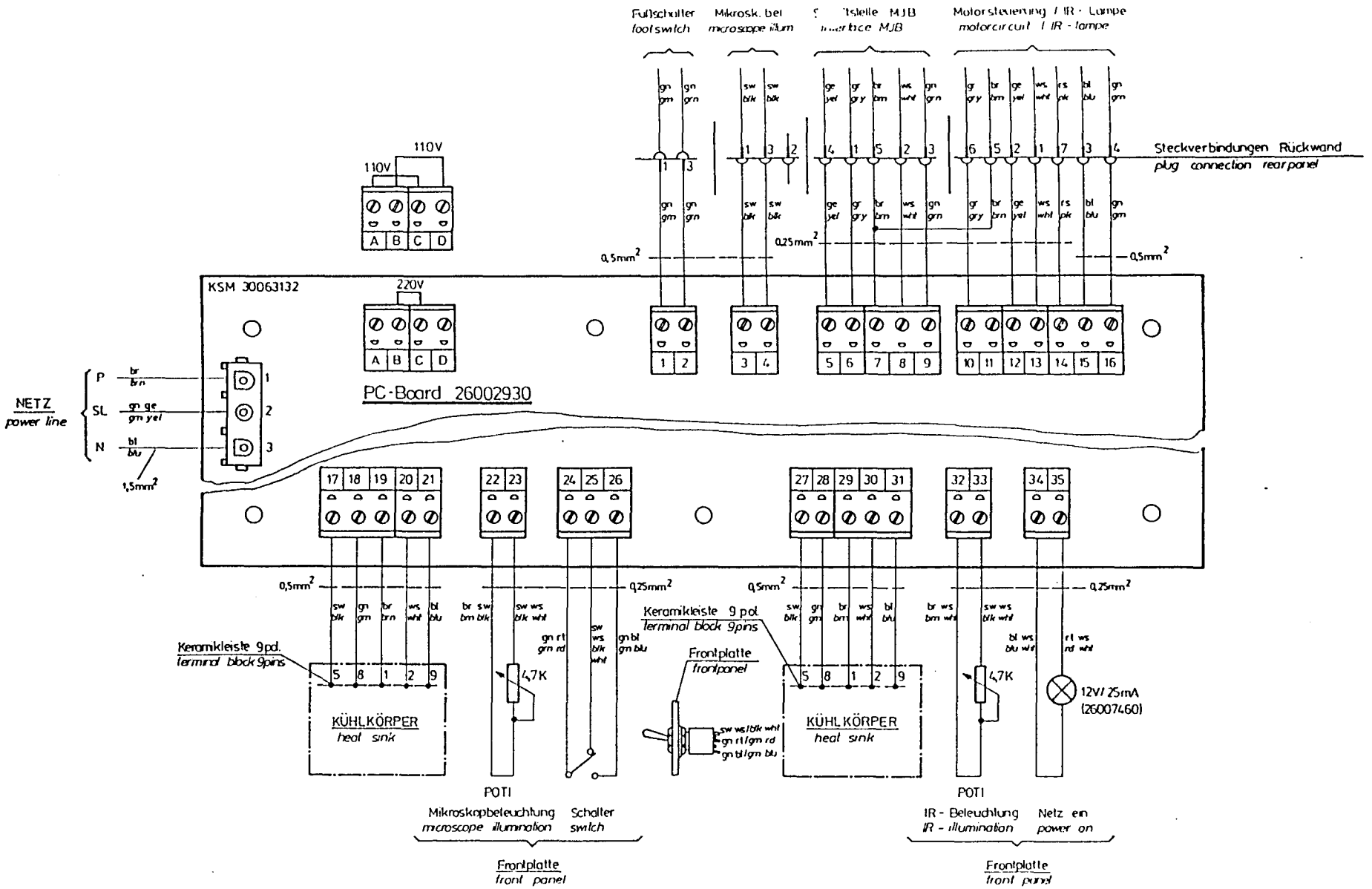

			Verdrahtung		
			WIRING DIAGRAM		
				26002930	Karl Süss
REIL	10/91	WE	03002489	MJB 3 IR/SC	KG GMBH & CO.
GEPR	TAG	NAME			8046 GARCHING b. MÜNCHEN

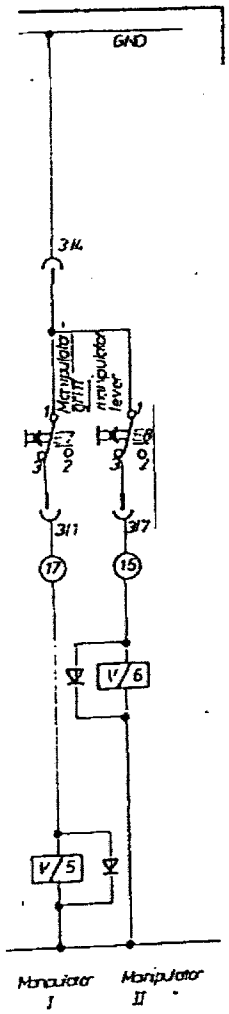

Karl Süss
KG GMBH & CO.
CHING b. MÜNCHEN

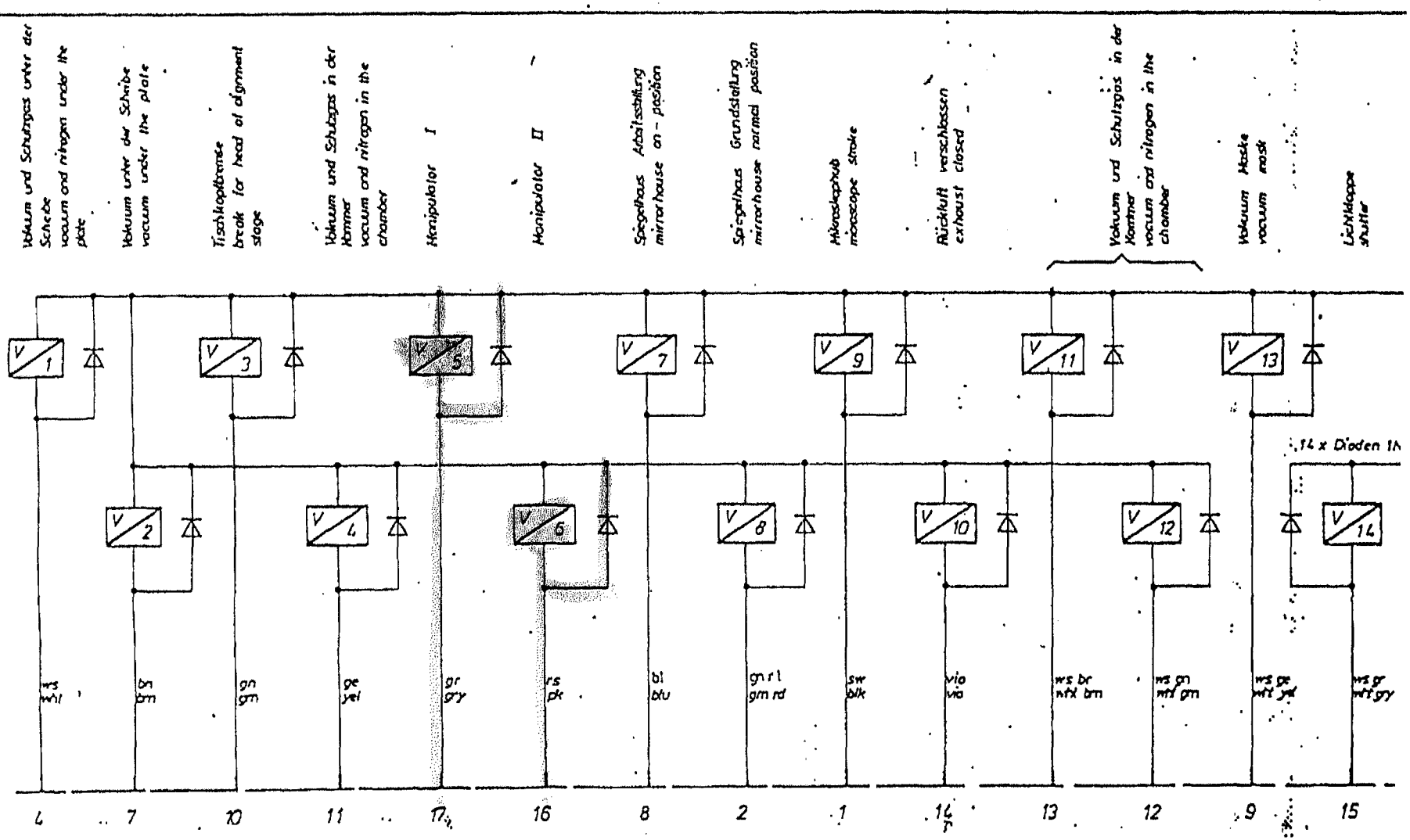

STECKVERBINDUNG 2 18pol. 61017418
connection 2 18pins

			PNEUMATIK pneumatic	
REIL	01/92	WE.	HPIST	
REIL	03/95	WE.	MJB 3	
INDEX	DG	NAME		

KG GMBH & C
8046 GARCHING b.

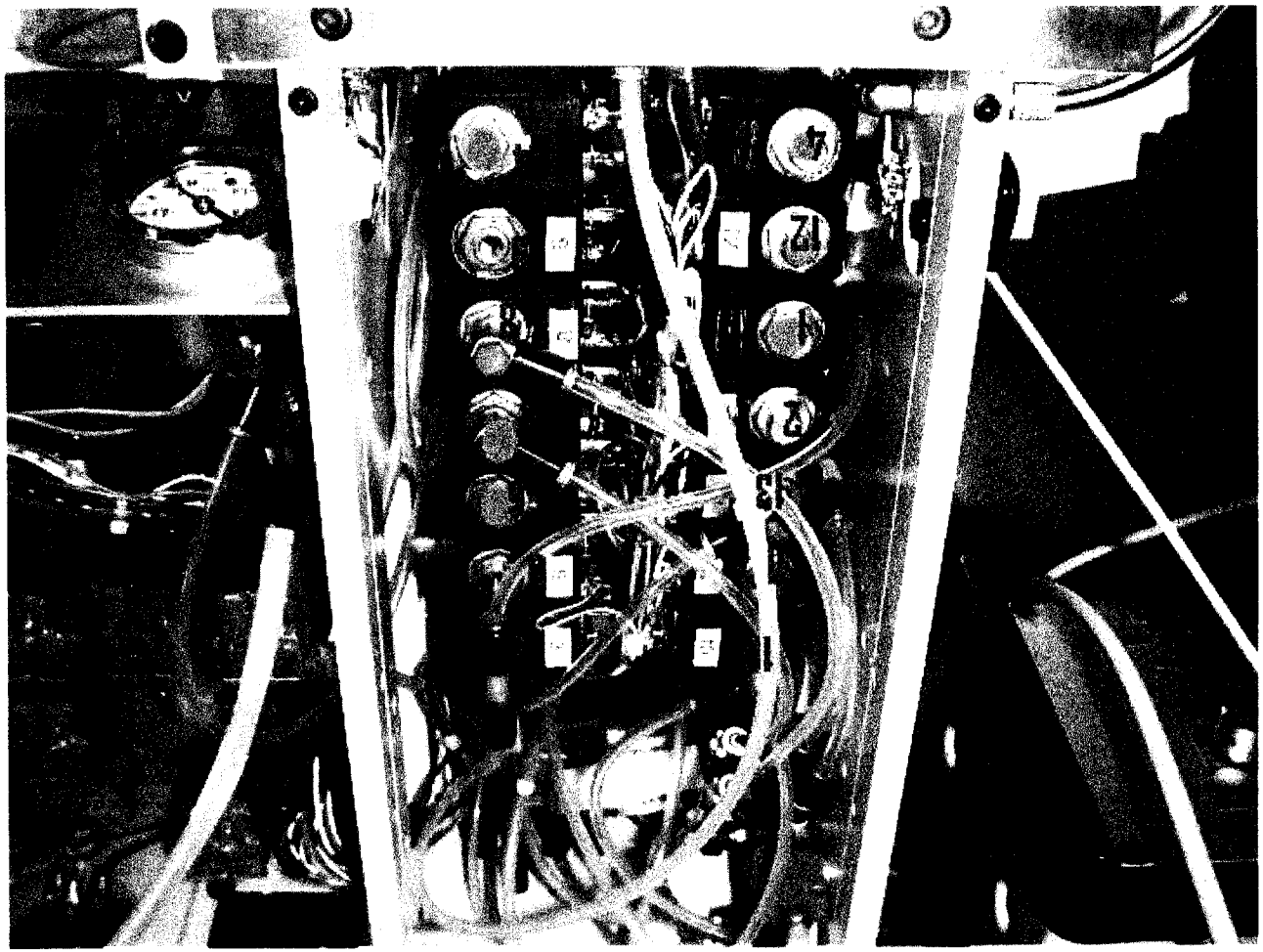

CALIBRATING THE DISPLAY ON THE POWER SUPPLY

1.) Place the UV meter's probe in the center of the chuck.
2.) Turn on the mask aligners "lamp test" service program.
3.) Press CI1 for 6 seconds. You should hear two beeps one after 3 seconds and one at 6 seconds.
4.) "Set display" should be illuminated.
5.) Use the arrows to make the display on the power supply match the display of the meter.
6.) Push CI1 for 3 seconds.
7.) Set level should be illuminated.
8.) Use the arrows to obtain the proper intensity for your process. The display on the power supply and the display on the meter should follow each other and stay the same.
9.) If the two displays display a slightly different number, repeat steps 3-8.
10.) Repeat steps 3-9 but use CI2 instead of CI1. (CI1 is used for 365nm and CI2 is used for 405nm wavelengths.)
11.) Your power supply is now calibrated.

MANipulator WiRiNg

22 A.W.G wiRe 30"

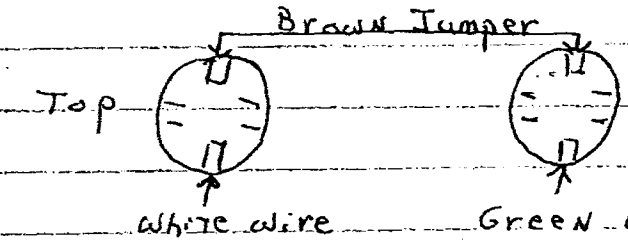

Top Switch- 7-4
Bottom Switch- 1-4

Plug END

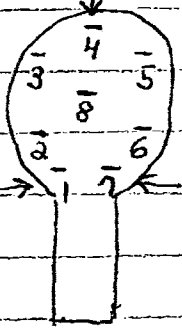

61001031 Plugs
61042633 New style male connector

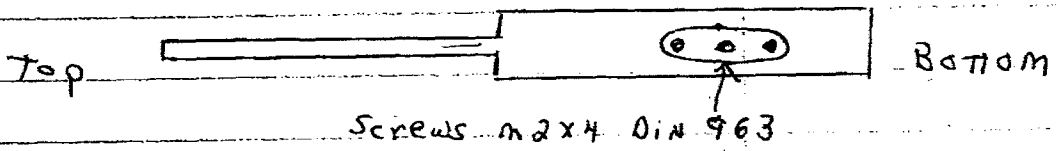

Cord Should be ~~3ft~~ 30" ~~From Top end~~